PERSTA

ASME HIGH PRESSURE VALVES







6035.1.11.26



INTEGRATED MANUFACTURING EXPERTISE

FROM FORGING TO THE FINISHED VALVE – OUR VALUE-ADDED CHAIN

At Stahl-Armaturen PERSTA GmbH, we set the benchmark for customized, innovative solutions in the low-, medium- and high-pressure valve segments. With nominal sizes ranging from DN 10 to DN 1000, pressure ratings from PN 10 to PN 630 and compatibility with a wide range of process media, we deliver tailored solutions for even the most demanding applications.

From nuclear power plants, conventional power plants to solar thermal power plants our valves meet the exacting requirements of these dynamic industries. Our products are also used in modern waste-to-energy plants, gas and steam power stations, as well as biomass and district heating facilities, where they play a key role in improving operational efficiency.

One of the keys to our success is the use of forged steel, with raw materials sourced from our own forge to ensure outstanding durability and quality. By bringing together product development, machining and welding expertise under one roof, we offer comprehensive know-how and solutions from a single source.

Your industry – our solution

With our own history and our decades of experience in a variety of processes, we offer our customers specific customised solutions.
Our valves can be manufactured according to any specifications, no matter how challenging – insuring optimum results right from the very first step of your own production process. We also offer complete packages: we deliver ready to install valve combinations up to DN800 and a total weight of up to 12 tonnes, including all testing, the full technical inspection and documentation – all delivered to your construction site. PERSTA industrial valves are certified in accordance with DIN, EN standards, technical codes such as AD2000 and the European Pressure Equipment Directive 2014/68/EU, and we are an ASME-S-STAMP Holder.

The following valves are designed for normal operation:

- Operation with liquid or gaseous medium, without particular corrosive, chemical or abrasive effects.
- Temperature fluctuation speeds of about 3–6 °K/min.
- Normal flow rates depending on the type of medium and the application for which the valve is used.
- Operation without additional external influences, such as pipe forces, vibrations, wind loads, earthquakes, corrosive environments, fires, traffic loads, decomposition pressures of unstable fluids.

Safe solutions for generations – with passion and connectedness

We develop, customised measures and solutions in accordance with our customers' requirements, their specific demands and challenges.
These measures could include:

- Choice of special materials
- Additional wall thickness
- Protecting areas at risk of wear
- Suitable seals and bolted connections
- Special operating instructions according to the medium and operation
- Special coatings
- Equipment to prevent excess pressure
- Special designs for regulating operation

In addition, customers can take measures during planning and installation of pipelines to minimise additional strains and hazards for the valves, to the piping system and to the environment, e.g.:

- Installing vibration dampers
- Observance of safety end positions if the auxiliary power fails
- Measures for safe discharge of hazardous media in the event of external leaks

By attaching a CE mark to the product, we declare conformity with the Pressure Equipment Directive 2014/68/EU. Please refer to our operating instructions for further information and warnings that must be taken into account when operating our industrial valves.

Subject to technical modifications

TABLE OF CONTENTS

Page	Designation	Series	Size	Rating
	Valves			
6	High pressure globe valve HD 91.1	200 JM	NPS ¾-2	Class 1850
10	High pressure globe valve HD 2000	200 LM	NPS ⅜-2 ½	Class 3200
14	High pressure globe valve DVA 25 / DVA 40	200 BZ	NPS 3-10	Class 1500-2500
18	Blow down valve KAV	202 FJ	NPS 2-2½	Class 2500
	Gate valves			
22	Gate valve S 2000	700 HJ/JJ	NPS 2-6	Class 600
26	Gate valve PD 18	700 JJ	NPS 2-10	Class 900
30	High pressure gate valve – Design Characteristics			
32	High pressure gate valve DSK 10	700 JT	NPS 14-28	Class 725
36	High pressure gate valve DSK 26	700 JT	NPS 2½-12	Class 1500-2500
40	High pressure gate valve DSK 27	700 JT	NPS 2½-24	Class 900-450
44	Over pressure safety device			
46	Valves automation and accessories			
47	Standard electric actuator setting and wiring			
	Swing check valves			
48	Swing check valve	640 AA	NPS 2-10	Class 900
52	Swing check valve	640 AA	NPS 12-20	Class 600
56	High pressure swing check valve DRI 26	640 AB	NPS 2½-12	Class 1500-2500
60	High pressure swing check valve DRI 27	640 AB	NPS 2½-24	Class 900-4500
64	High pressure stop check valve DRA 26/27	640 ST	NPS 3-16	Class 900-2500
	High pressure line blind valves			
66	High pressure line blind valve DPV 10-27	990 VW	NPS 2½-28	Class 900-4500
	Technical appendix			
70	Pressure rating tables			
74	Endpreparations buttwelding ends			
77	Figure number code			

Note

The values specified in the operating pressure and temperature tables represent maximum permissible operating data for our valves.
When selecting products, system-specific fluctuation ranges in pressure and temperature and possible malfunction conditions must be taken into account.

HIGH PRESSURE GLOBE VALVE

HD 91.1 200 JM NPS ¾-2 CLASS 1850



Subject to technical modifications

Design highlights

- Body seat: edge seat welded on integratedly with stellite
- Disc / stem single piece of material > 570 °C with stellited edge seat
- Sealing to the outside only means of the gland packing
- Body and bonnet in two separate pieces with bolted connection
- Yoke sleeve supported by needle bearings (axial type)
- Possibility to add an actuator-flange

Advantages

- No pressed in or screwed seat ring, therefore no crevice corrosion or loosening
- No damages between disc and stem because of high flow velocity
- No bonnet gaskets, therefore reduction of possible leakage areas
- To ease maintenance work, e.g. regrinding of the body seats
- To minimize the expenditure of effort when operating valve
- Simple retrofitting of an electric actuator possible

Standard features

- Disc and stem in one piece
- Die-forged valve body
- Non-turning, rising stem
- Position indicator
- Throttle disc
- Yoke sleeve supported by needle bearings
- Possibility to add an actuator-flange

Pressure and temperature ratings

- Up to standard class or special class 1850

Materials

- A 105
- A 182 F12
- A 182 F22

Other materials available on request.

Media

Depending on the material the globe valves are suitable for water, gas, oil and other non aggressive media

Fields of application

High temperature steam and water, refining (catalytic reformers and hydrocrackers), petrochemical and chemical industries, power plants.

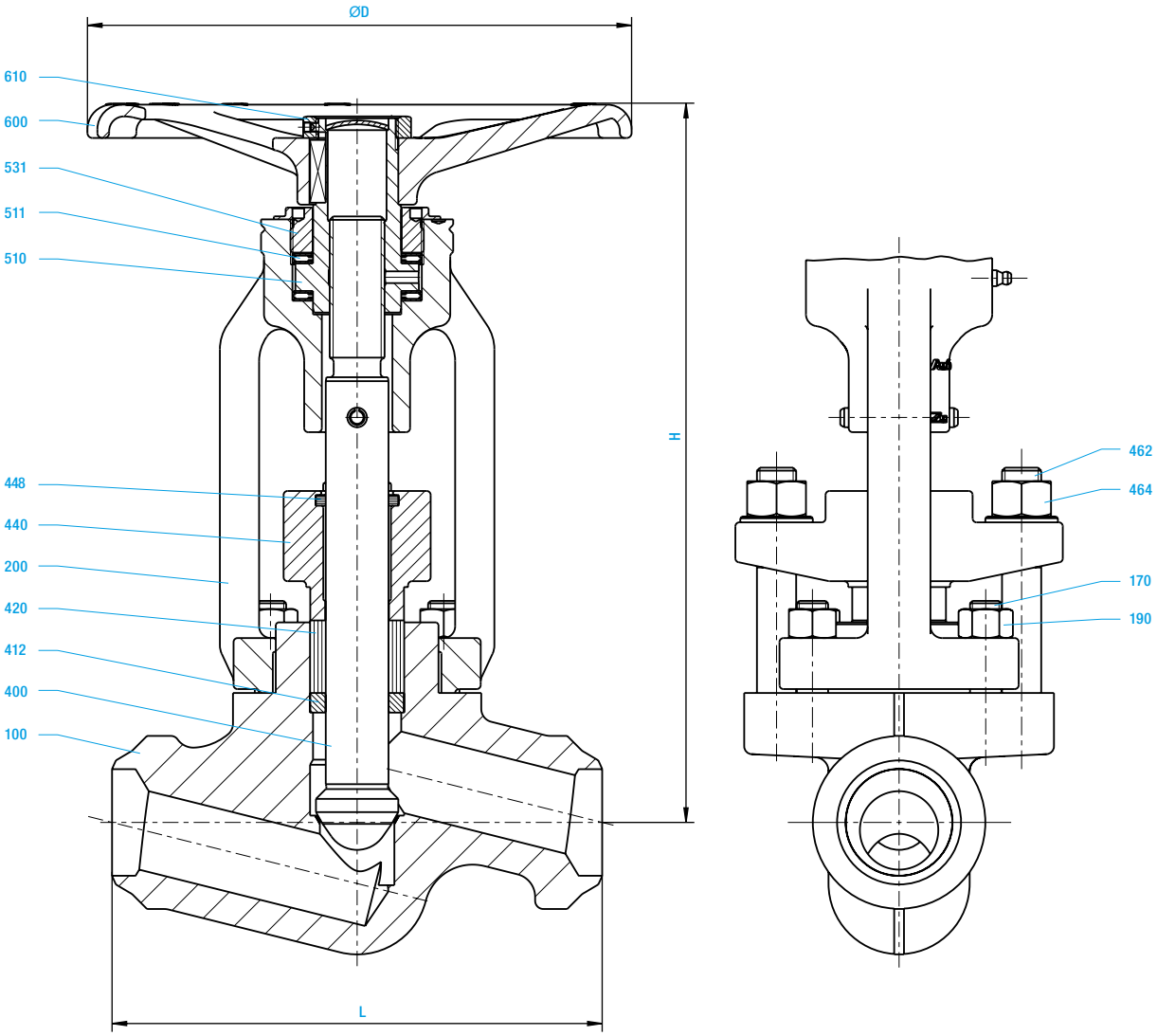

Subject to technical modifications

Materials

Item	Designation	ASTM A105 (B1)	ASTM A182 F12 (D4)	ASTM A182 F22 (D5)
100	Body	ASTM A105	ASTM A182 F12	ASTM A182 F22
	welded on with	Stellite	Stellite	Stellite
170	Stud	A 193 B16	A 193 B16	A 193 B16
190	Hexagonal nut	A 194 4	A 194 4	A 194 4
200	Bonnet	1.7379	1.7379	1.7379
400	*Stem*	*1.4122 [1)]*	*1.4122 [1)]*	*1.4122 [1)2)]*
412	Guide sleeve	0.7660	0.7660	0.7660
420	*Packing*	*Pure graphite*	*Pure graphite*	*Pure graphite [2)]*
440	Gland flange	1.7379	1.7379	1.7379
448	*Dirt scraper*	*Graphite plait*	*Graphite plait*	*Graphite plait*
462	Stud	A 193 B16	A 193 B16	A 193 B16
464	Hexagonal nut	A 194 4	A 194 4	A 194 4
510	*Yoke sleeve*	*CW 713 R*	*CW 713 R*	*CW 713 R*
511	*Bearing*	*WLSt*	*WLSt*	*WLSt*
531	Screwing	ASTM A105	ASTM A105	ASTM A105
600	Handwheel	5.3106	5.3106	5.3106
610	Hexagonal nut	St	St	St

Spare parts

1) On request stem in 1.4923 with stellited seats.
2) For temperatures > 570 °C stem with stellited seats in 1.4923 and hightemperature-packing.

Dimensions (mm)

NPS	DN	BW / SW L	H	Stroke	Rotation/ stroke	ØD	Flange F ISO 5210
¾	**20**	160	244	16	8	180	F10
1	**25**	160	244	16	8	180	F10
1 ¼	**32**	250	367	27	9	280	F10/F14
1 ½	**40**	250	367	27	9	280	F10/F14
2	**50**	250	367	27	9	280	F10/F14

Weights (kg), Cvs value (USG/min) and Kvs value (m^3/h)

NPS	DN	BW / SW kg	Flow Coefficient* Cv	Kvs
¾	**20**	8.1	7.3	6.2
1	**25**	8.1	9.3	7.9
1 ¼	**32**	27.5	23.2	20.0
1 ½	**40**	27.5	27.9	24.1
2	**50**	27.5	32.8	28.3

* Deviations are possible due to changed connection dimensions

HIGH PRESSURE GLOBE VALVE

HD 2000 200 LM NPS ⅜-2 ½ CLASS 3200

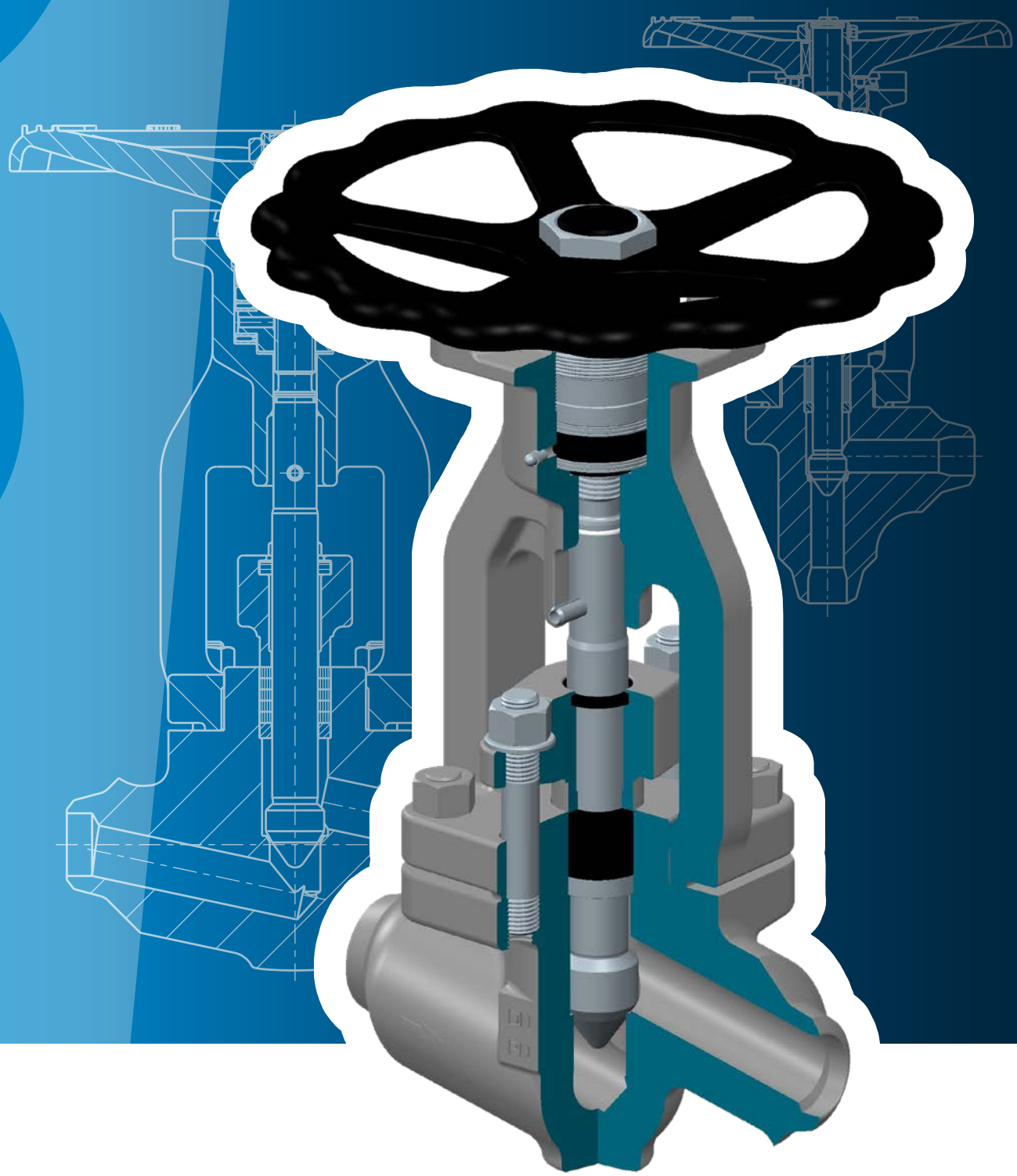

Subject to technical modifications

Design highlights

- Body seat: edge seat welded on integratedly with stellite
- Disc / stem single piece of material > 570 °C with stellited edge seat
- Sealing to the outside only means of the gland packing
- Body and bonnet in two separate pieces with bolted connection
- Yoke sleeve made of bronze
- Cup springs above the upper needle bearing

Advantages

- No pressed in or screwed seat ring, therefore no crevice corrosion or loosening
- No damages between disc and stem because of high flow velocity
- No bonnet gaskets, therefore reduction of possible leakage areas
- To ease maintenance work, e.g. regrinding of the body seats
- Good emergency running properties
- To maintain the necessary closing forces when dimensions change between stem and yoke arms due to thermal fluctuation

Standard features

- Disc and stem in one piece
- Die-forged valve body
- Non-turning, rising stem
- Position indicator / Anti-rotation device
- Throttle disc
- Yoke sleeve supported by needle bearings
- Greater than NPS 3/4 with integral actuator flange
- Back seat type available (200 LS / 200 LJ)
- All HD 2000 valves also available in angle pattern (e.g. 202 LM)

Pressure and temperature ratings

- Up to standard class or special class 3200
- Socket welding limited to class 2850

Materials

- A 105
- A 182 F12 Cl.2
- A 182 F22 Cl.3
- A 182 F91
- A 182 F92
- A 182 F347 H

Other materials available on request.

Media

Depending on the material the globe valves are suitable for water, gas, oil and other non aggressive media

Fields of application

High temperature steam and water, refining (catalytic reformers and hydrocrackers), petrochemical and chemical industries, power plants.

200 LM Shut-off globe valve

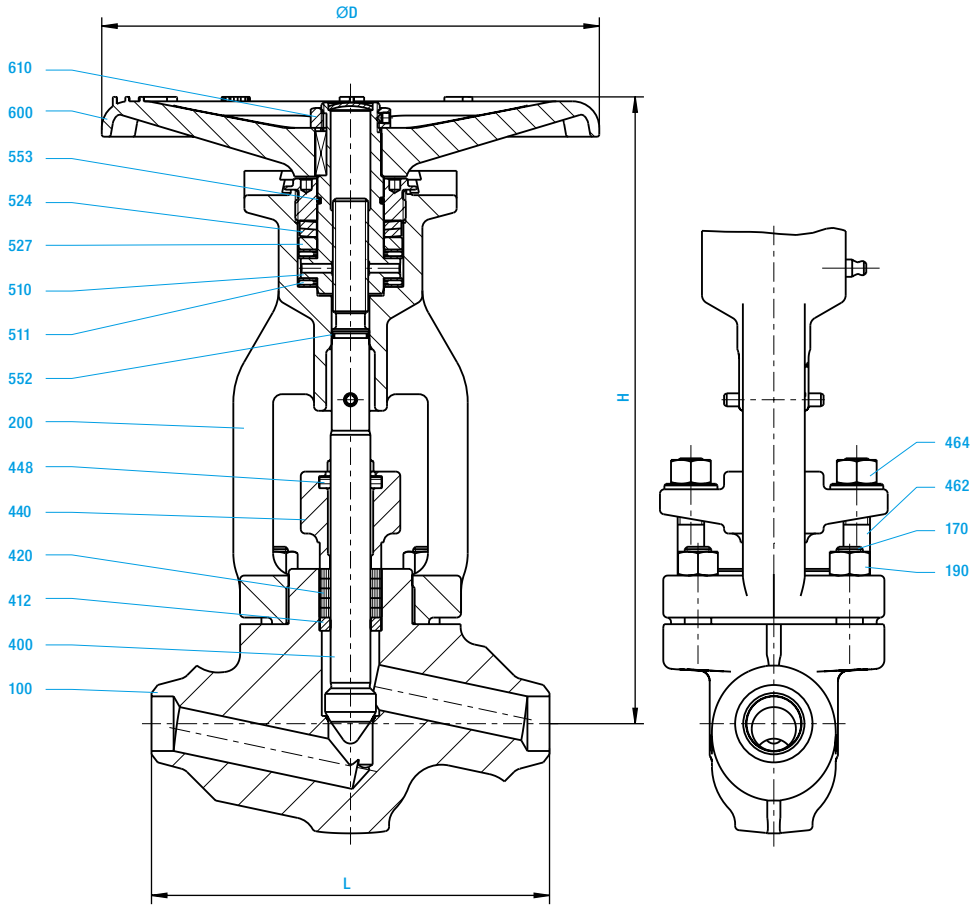

202 LM Shut-off globe valve

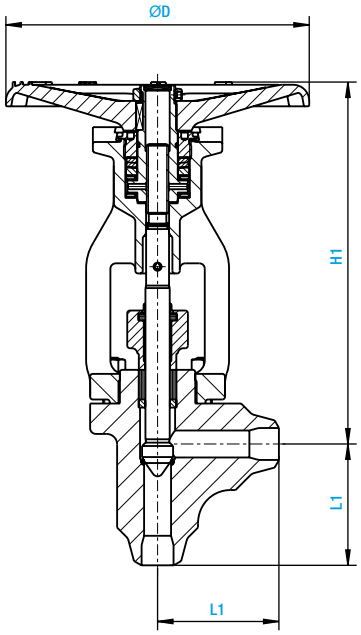

200 LS* globe valve with back seat also available in angle pattern

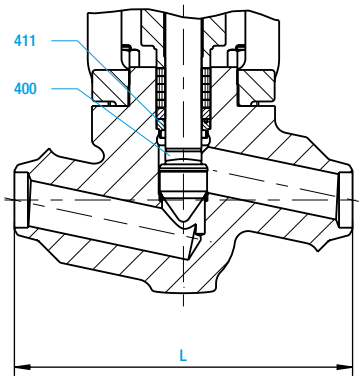

240 MM* Stop check valve also available in angle pattern

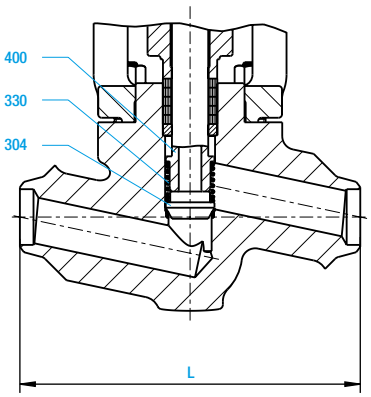

240 MT Lift check valve also available in angle pattern

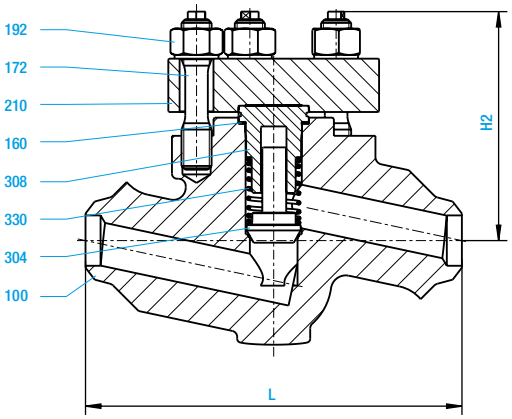

* also available in angular form

Subject to technical modifications

990 ST Strainer
also available in angle pattern

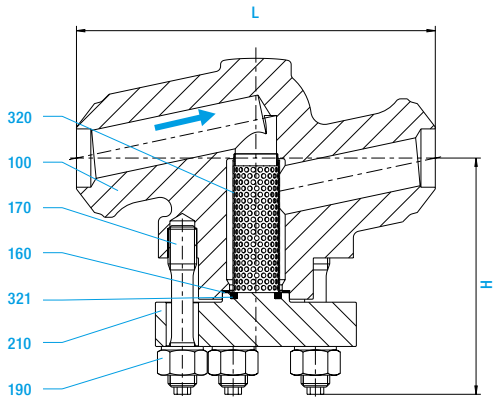

Materials

Item	Designation	ASTM A 105 (B1)	ASTM A 182 F12 (D4)	ASTM A 182 F22 (D5) [2]	ASTM A 182 F91 (F3) [2]	ASTM A 182 F92 (F6) [2]	ASTM A 182 F347 H (H9)
100	Body	ASTM A105	ASTM A182 F12	ASTM A182 F22	ASTM A182 F91	ASTM A182 F92	ASTM A182 F347H
	welded on with	Stellite	Stellite	Stellite	Stellite	Stellite	Stellite
160	*Gasket*	*Graphite*	*Graphite*	*Graphite*	*Graphite*	*Graphite*	*Graphite*
170	Stud [1]	A 193 B16	A 193 B16	A 193 B16	A 193 B16	ASTM A453 Gr 660	ASTM A453 Gr 660
172	Stud [2]	A 193 B16	A 193 B16	A 193 B16	A 193 B16	ASTM A453 Gr 660	ASTM A453 Gr 660
190	Hexagonal nut [1]	A 194 4	A 194 4	A 194 4	A 194 4	ASTM A453 Gr 660	ASTM A453 Gr 660
192	Hexagonal nut [2]	A 194 4	A 194 4	A 194 4	A 194 4	ASTM A453 Gr 660	ASTM A453 Gr 660
200	Bonnet	1.7379	1.7379	1.7379	1.7379	1.7379	1.7379 [3]
210	Cover	ASTM A182 F22	ASTM A182 F22	ASTM A182 F22	ASTM A182 F91	ASTM A182 F92	ASTM A182 F347H
304	*Disc*	*1.4923*	*1.4923*	*1.4923*	*1.4923*	*1.4923*	*ASTM A453 Gr 660*
308	Guide bush	1.4923	1.4923	1.4923	ASTM A453 Gr 660	ASTM A453 Gr 660	ASTM A453 Gr 660
330	Pressure spring	2.4669	2.4669	2.4669	2.4669	2.4669	2.4669
400	*Stem*	*1.4122 [1]*	*1.4122 [1]*	*1.4122 [1] [2]*	*1.4122 [1] [2]*	*ASTM A453 Gr 660*	*ASTM A453 Gr 660*
411	Back seat ring	ASTM A453 Gr 660	ASTM A453 Gr 660	ASTM A453 Gr 660	ASTM A453 Gr 660	ASTM A453 Gr 660	ASTM A453 Gr 660
412	Guide sleeve	0.7660	0.7660	0.7660	0.7660	0.7660	0.7660
420	*Packing*	*Pure graphite*	*Pure graphite*	*Pure graphite*	*Pure graphite*	*Pure graphite*	*Pure graphite*
440	Gland flange	1.7379	1.7379	1.7379	1.7379	1.7379	1.7379 [3]
448	*Dirt scraper*	*Graphite plait*	*Graphite plait*	*Graphite plait*	*Graphite plait*	*Graphite plait*	*Graphite plait*
462	Stud	A 193 B16	A 193 B16	A 193 B16	A 193 B16	ASTM A453 Gr 660	ASTM A453 Gr 660
464	Hexagonal nut	A 194 4	A 194 4	A 194 4	A 194 4	ASTM A453 Gr 660	ASTM A453 Gr 660
510	*Yoke sleeve*	*CW 713 R*	*CW 713 R*	*CW 713 R*	*CW 713 R*	*CW 713 R*	*CW 713 R*
511	*Bearing*	*WLSt*	*WLSt*	*WLSt*	*WLSt*	*WLSt*	*WLSt*
524	Spring	1.8159	1.8159	1.8159	1.8159	1.8159	1.8159
527	Supporting ring	1.4021	1.4021	1.4021	1.4021	1.4021	1.4021
552	*O-Ring*	*Viton*	*Viton*	*Viton*	*Viton*	*Viton*	*Viton*
553	*O-Ring*	*Viton*	*Viton*	*Viton*	*Viton*	*Viton*	*Viton*
600	Handwheel	5.3106	5.3106	5.3106	5.3106	5.3106	5.3106
610	Hexagonal nut	St	St	St	St	St	St

Spare parts

1) On request stem with stellited seats.
2) For temperatures > 570 °C, stem material 1.4980, seat surface armoured with Stellite, and high-temperature packing. 3) Chemically nickel-plated

Dimensions (mm)

NPS	DN	ØD	BW / SW L	RF L1	H	H1	H2	Stroke	Rotation/ stroke	Flange F DIN/ISO 5210
⅜	10	140	150	75	228	215	100	10	5	F10
½	15	140	150	75	228	215	100	10	5	F10
¾	20	225	180	90	285	268	122	16	8	F10
1	25	225	180	90	285	268	122	16	8	F10
1 ¼	32	360	300	150	445	415	185	27	9	F10/F14
1 ½	40	360	300	150	445	415	185	27	9	F10/F14
2	50	360	300	150	445	415	185	27	9	F10/F14
2 ½	65	450	360	200	585	557	242	36	12	F14/F16

Weights (kg), Cvs value (USG/min) and Kvs value (m³/h)

NPS	DN	BW / SW 200 LM/LS	BW / SW 240 MM	BW / SW 202 LM	BW / SW 240 MT	Flow Coefficient* 200 LM/LS Cv	Flow Coefficient* 200 LM/LS Kvs
⅜	10	6	6	6	3.8	2.7	2.3
½	15	6	6	6	3.8	4	3.4
¾	20	12	12	12	7.7	7.3	6.2
1	25	12	12	12	7.7	9.3	7.9
1 ¼	32	47.5	47.5	47.5	29	23.2	20
1 ½	40	47	47	47	29	27.9	24.1
2	50	46.5	46.5	46.5	30	32.8	28.3
2 ½	65	110	110	110	67	56.1	48.5

* Deviations are possible due to changed connection dimensions

Subject to technical modifications

HIGH PRESSURE GLOBE VALVE

DVA 25 / DVA 40 200 BZ NPS 3-10 CLASS 1500-2500



Subject to technical modifications

Design highlights

- Forged body and bonnet
- Pressure sealing bonnet
- Seat generally integral and armoured with Stellite
- High bonnet
- Stem with anti-twist device can be used as position indicator
- Non-rotating, rising stem with external stem thread and roll-polished shaft
- Gland and gland ring in two parts
- Yoke sleeve with neadle bearing
- Disc spring assembly effective in closing direction

Advantages

- Homogeneous joining, sturdy and heavy duty
- Increasing external impermeability as operating pressure rises
- Absolute seat impermeability
- Avoids impermissible temperatures in the bearing area
- Anti-twist device can be used as position indicator
- Minimum packing wear
- Avoids stem damage due to uneven tightening of packing bolts
- Reduced force needed to actuate the valve
- Required closing forces maintained regardless of changes in length between the stem and bonnet, caused by temperature fluctuations

Version

- Flow passage with straight top part
- Body forged
- Pressure sealing bonnet as per VGB guidelines
- Throttle disc
- Integral seat with Stellite
- External stem thread
- Position indicator / anti-twist device
- Yoke sleeve bearing-mounted on both sides
- Non-rotating, rising stem
- Suitable for mounting actuators
- Available in angular form 202 BZ
- Preferred direction of flow “pressure above disc”

Operating data

- Operating pressure up to 600 bar
- Operating temperature up to 650 °C0

Materials

- A 105
- A 182 F12 Cl.2
- A 182 F22 Cl.3
- A 182 F91
- A 182 F92

Other materials available on request.

Flow medium

Depending on the choice of materials, the high pressure globe valves can be used for water, steam, gas, oil or other non-aggressive media.

Applications

In chemical, industrial and power station plants.

DVA 25 Class 1500 NPS 3-10*

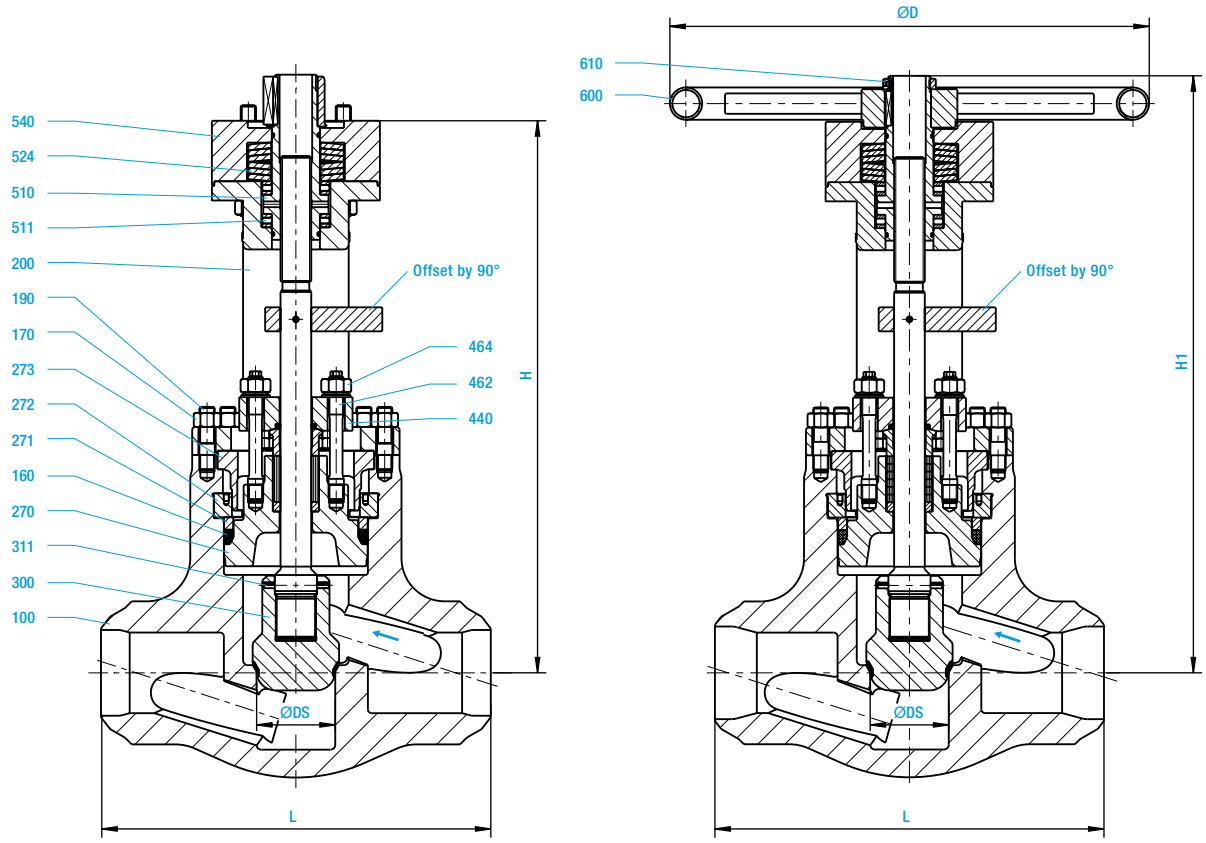

DVA 40 Class 2500 NPS 3-8*

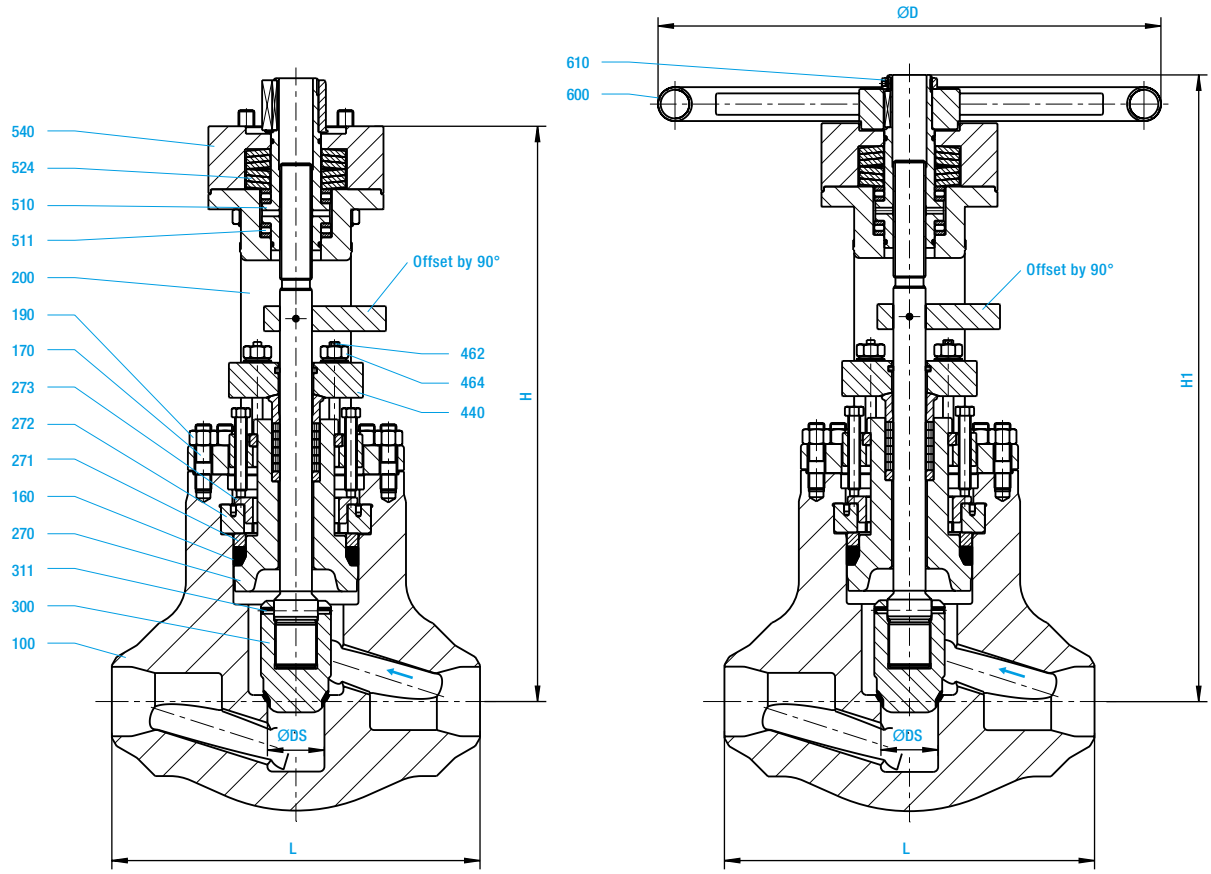

←

Subject to technical modifications

Materials

Item	Designation	ASTM A105 (B1)	ASTM A182 F12 (D4)	ASTM A182 F22 (D5)	ASTM A182 F91 (F3)	ASTM A182 F92 (F6)
100	Body	ASTM A105	ASTM A182 F12	ASTM A182 F22	ASTM A182 F91	ASTM A182 F92
	Body seat	Stellite	Stellite	Stellite	Stellite	Stellite
160	*Gasket*	*Graphite*	*Graphite*	*Graphite*	*Graphite*	*Graphite*
170	Bolt	ASTM A193 B7	ASTM A193 B7	ASTM A193 B7	ASTM A193 B16	ASTM A453 Gr. 660
190	Hexagonal nut	ASTM A194 2H	ASTM A194 2H	ASTM A194 2H	ASTM A194 4	ASTM A453 Gr. 660
200	Bonnet	1.7379	1.7379	1.7379	1.7379	1.7379
270	Cover	ASTM A182 F22	ASTM A182 F22	ASTM A182 F22	ASTM A182 F91	ASTM A182 F92
271	Support ring	ASTM A182 F22	ASTM A182 F22	ASTM A182 F22	ASTM A182 F91	ASTM A182 F92
272	Segment ring	ASTM A182 F22	ASTM A182 F22	ASTM A182 F22	ASTM A182 F91	ASTM A182 F92
273	Support cap	1.5419	1.5419	1.5419	1.5419	1.5419
300	*Disc*	*ASTM A182 F91*	*ASTM A182 F91*	*ASTM A182 F91*	*ASTM A182 F91*	*ASTM A182 F92*
	Disc seat	Stellite	Stellite	Stellite	Stellite	Stellite
311	Pin	1.4571	1.4571	1.4571	1.4571	1.4571
400	*Stem*	*1.4122*	*1.4122*	*1.4122*	*1.4122*	*1.4923*
400	*Stem from 500 °C*		*1.4980* [1)]	*1.4980*	*1.4980*	
420	Packing	Graphite	Graphite	Graphite	Graphite	Graphite
440	Gland	1.7380	1.7380	1.7380	1.7380	1.7380
462	Bolt	ASTM A193 B7	ASTM A193 B7	ASTM A193 B7	ASTM A193 B16	ASTM A453 Gr. 660
464	Hexagonal nut	ASTM A194 2H	ASTM A194 2H	ASTM A194 2H	ASTM A194 4	ASTM A453 Gr. 660
510	*Yoke sleeve*	*CW713R*	*CW713R*	*CW713R*	*CW713R*	*CW713R*
511	*Anti-friction bearing*	*WLSt*	*WLSt*	*WLSt*	*WLSt*	*WLSt*
524	Disc spring	FSt	FSt	FSt	FSt	FSt
540	Flange	1.0460	1.0460	1.0460	1.0460	1.0460
600	Handwheel	St [2)]	St [2)]	St [2)]	St [2)]	St [2)]
610	Hexagonal nut	St	St	St	St	St

Spare parts

1) For Class 1500 from NPS 6 and for Class 2500 from NPS 5
2) For Class 1500 NPS 3 material 5.3106

Dimensions (mm), Weights (kg), Cvs value (USG/min) and Kvs value (m^3/h)

DVA 25							Stroke		DIN/ISO	BW	Flow Coefficient*	
NPS	**DN**	**ØD**	**Ø DS**	**L**	**H**	**H1**	**length**	**Rev/stroke**	**5210**	**kg**	**Cv**	**Kvs**
3	**80**	450	64	305	475 (F14)	510	32	11	F10/F14	77	83	71
4	**100**	500	82	406	575 (F14)	625	42	14	F14	132	111	95
5	**125**	600	100	483	725 (F16)	730	51	17	F14/F16	200	165	141
6	**150**	720	122	559	800 (F16)	875	62	21	F16/F25	380	245	210
8	**200**		160	711	950 (F25)		82	27	F25/F30	615	423	362
10	**250**		190	864	1075 (F30)		96	24	F30/F35	1120	595	510

Dimensions (mm), Weights (kg), Cvs value (USG/min) and Kvs value (m^3/h)

DVA 40							Stroke		DIN/ISO	BW	Flow Coefficient*	
NPS	**DN**	**ØD**	**Ø DS**	**L**	**H**	**H1**	**length**	**Rev/stroke**	**5210**	**kg**	**Cv**	**Kvs**
3	**80**	500	57	368	575 (F14)	625	28	9	F14	140	52	45
4	**100**	600	72	457	675 (F14)	730	38	13	F14/F16	225	86	73
5	**125**	720	90	533	815 (F16)	890	45	15	F16/F25	430	133	114
6	**150**		111	610	1000 (F25)		58	19	F25/F30	715	203	174
8	**200**		146	762	1065 (F30)		75	19	F30/F35	1140	350	300

* Deviations are possible due to changed connection dimensions.

BLOW DOWN VALVE

KAV 202 FJ NPS 2-2½ CLASS 2500

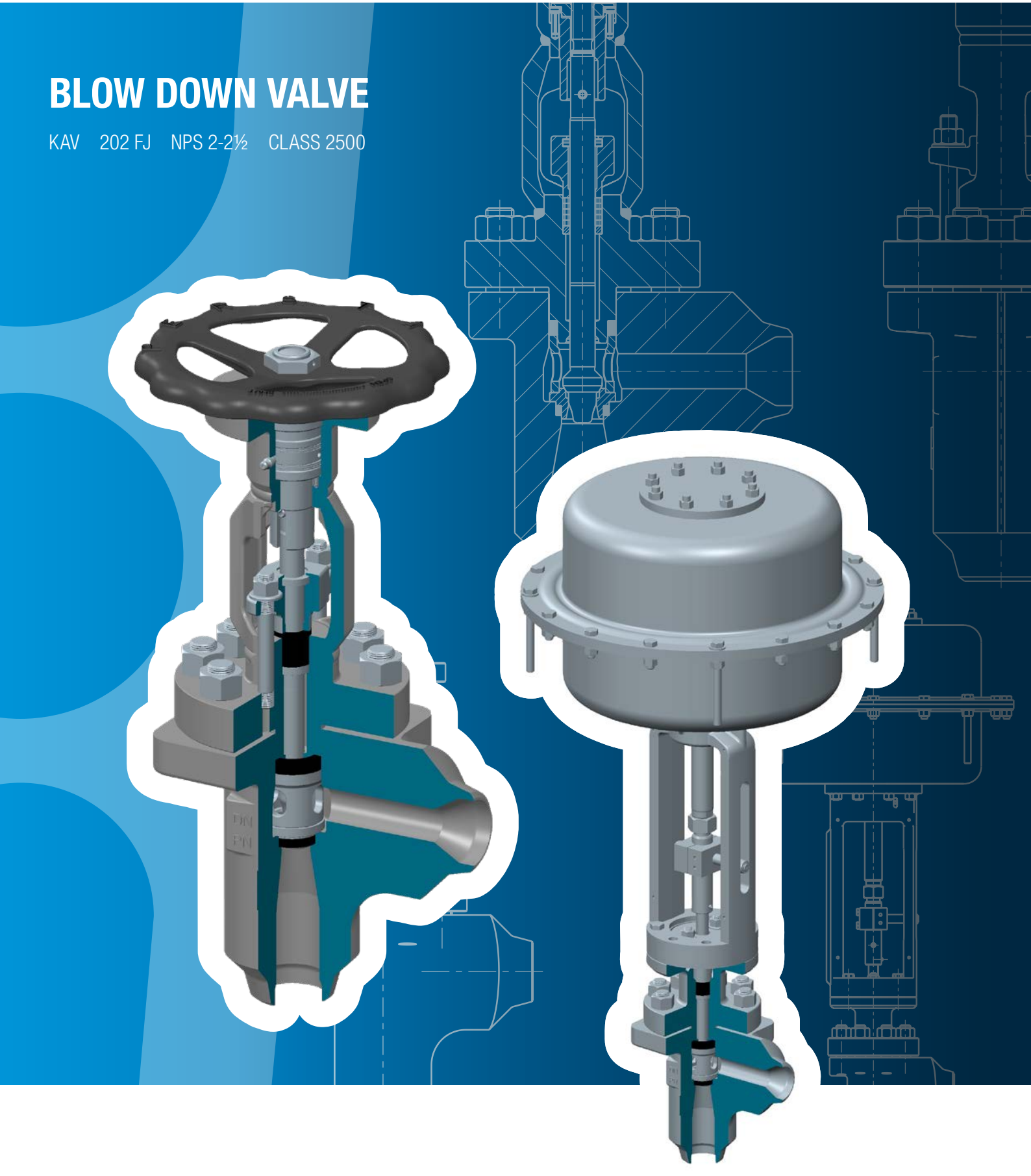

Subject to technical modifications

Design highlights

- Body seat with replaceable seat ring made of Stellite for high-wearing applications
- Single-piece stem with disc and armoured regulating attachment
- Shut-off and regulating geometry structurally separated
- The regulating geometry can be adjusted, on request
- The angular form valve version improves the flow characteristics and reduces wear
- The cover gasket and the gland packing are pretensioned separately
- The seal of the seat ring is ensured by a gasket in the “force shunt”
- Yoke sleeve in special brass with good emergency running characteristics
- The disc spring assembly limits the tensioning of the stem during warming and it cushions the closing procedure

Version

- Angular form with straight top part
- Body forged
- Non-rotating, rising stem
- Position indicator / anti-twist device
- Shut-off seat separate from throttle contour
- Neadle bearing yoke sleeve
- With integral actuator connection flange
- With back seat
- Flow passage form 200 FJ on request
- Dust proof version possible possible
- Actuated with handwheel, electric actuator, pneumatic actuator

Operating data

- Operating pressure up to 250 bar
- Operating temperature up to 650 °C
- no full class rating possible, also pressure and temperature marking required

Materials

- A 105
- A 182 F12
- A 182 F22
- A 182 F91
- A 182 F92

Other materials available on request.

Flow medium

Water/steam mixture

Applications

The drain valve is specifically designed for use as a blow down valve. If the valves are used as “continuous blow down” or “discontinuous blow down” valves, the seat ring and the disc (in particular) are subject to increased wear. For this reason, the stem with disc and the seat ring can be replaced. To ensure as long a service life as possible for the wear parts and thus to ensure internal tightness in the valve, the seat and throttle attachment are separate. The valve is only designed for operation with pressure inlet above the disc.

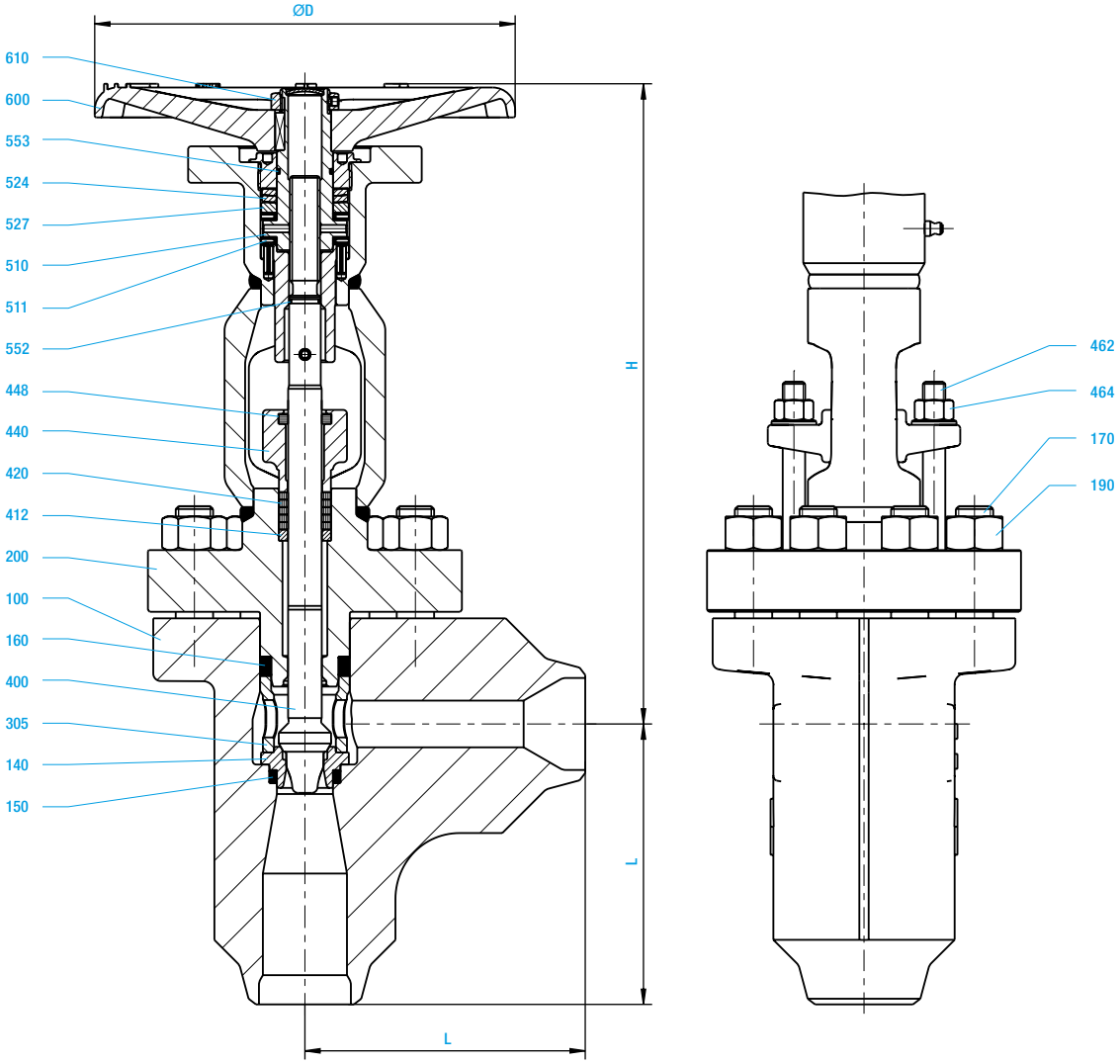

With connection parts for electric actuator

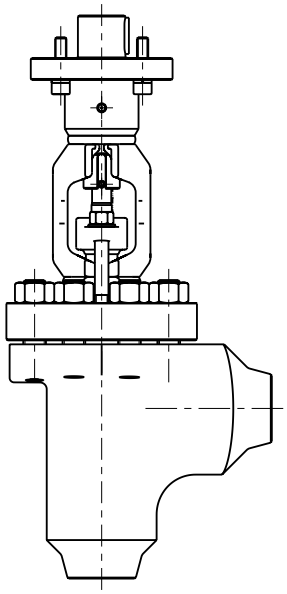

With pneumatic actuator

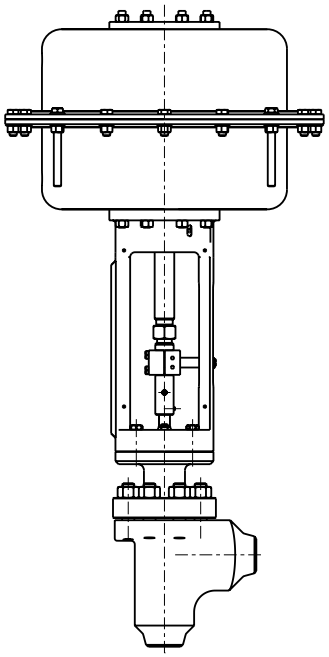

Subject to technical modifications

Materials

Item	Designation	ASTM A105 (B1)	ASTM A182 F12 (D4)	ASTM A182 F22 (D5)	ASTM A182 F91 (F3)
100	Body	ASTM A105	ASTM A182 F12	ASTM A182 F22	ASTM A182 F91
140	*Seat ring*	*Stellite*	*Stellite*	*Stellite*	*Stellite*
150	*Gasket*	*Graphite*	*Graphite*	*Graphite*	*Graphite*
160	*Gasket*	*Graphite*	*Graphite*	*Graphite*	*Graphite*
170	Bolt	ASTM A193 B7	ASTM A453 Gr.660	ASTM A453 Gr.660	ASTM A453 Gr.660
190	Hexagonal nut	ASTM A194 2H	ASTM A453 Gr.660	ASTM A453 Gr.660	ASTM A453 Gr.660
200	Bonnet	ASTM A182 F22	ASTM A182 F22	ASTM A182 F22	ASTM A182 F91
305	*Body insert*	*1.4980*	*1.4980*	*1.4980*	*1.4980*
400	*Stem*	*1.4980*	*1.4980*	*1.4980*	*1.4980*
412	Guide sleeve	0.7660	0.7660	0.7660	0.7660
420	*Packing*	*Pure graphite*	*Pure graphite*	*Pure graphite*	*Pure graphite*
440	Gland	1.7379	1.7379	1.7379	1.7379
448	*Packing ring*	*Graphite mesh*	*Graphite mesh*	*Graphite mesh*	*Graphite mesh*
462	Bolt	ASTM A193 B7	ASTM A193 B7	ASTM A193 B7	ASTM A453 Gr.660
464	Hexagonal nut	ASTM A194 2H	ASTM A194 2H	ASTM A194 2H	ASTM A453 Gr.660
510	*Yoke sleeve*	*CW 713 R*	*CW 713 R*	*CW 713 R*	*CW 713 R*
511	*Anti-friction bearing*	*WLSt*	*WLSt*	*WLSt*	*WLSt*
524	Disc spring	1.8159	1.8159	1.8159	1.8159
527	Supporting disc	1.4021	1.4021	1.4021	1.4021
552	*O-ring*	*Viton*	*Viton*	*Viton*	*Viton*
553	*O-ring*	*Viton*	*Viton*	*Viton*	*Viton*
600	Handwheel	5.3106	5.3106	5.3106	5.3106
610	Hexagonal nut	St	St	St	St

Spare parts

Dimensions (mm), Weights (kg), Cvs value (USG/min) and Kvs value (m^3/h)

NPS	DN	ØD	L	H	Stroke length	Rev/stroke	DIN/ISO 5210	Handwheel kg	Flow Coefficient* Cv	Kvs
2	**50**	225	150	340	23	11.5	F10/F14	32	15,3	13.1
2 ½	**65**	360	200	495	32	10.6	F14/F16	79	34,3	29.4

* Deviations are possible due to changed connection dimensions.

GATE VALVE

S 2000 700 HJ/JJ NPS 2-6 CLASS 600

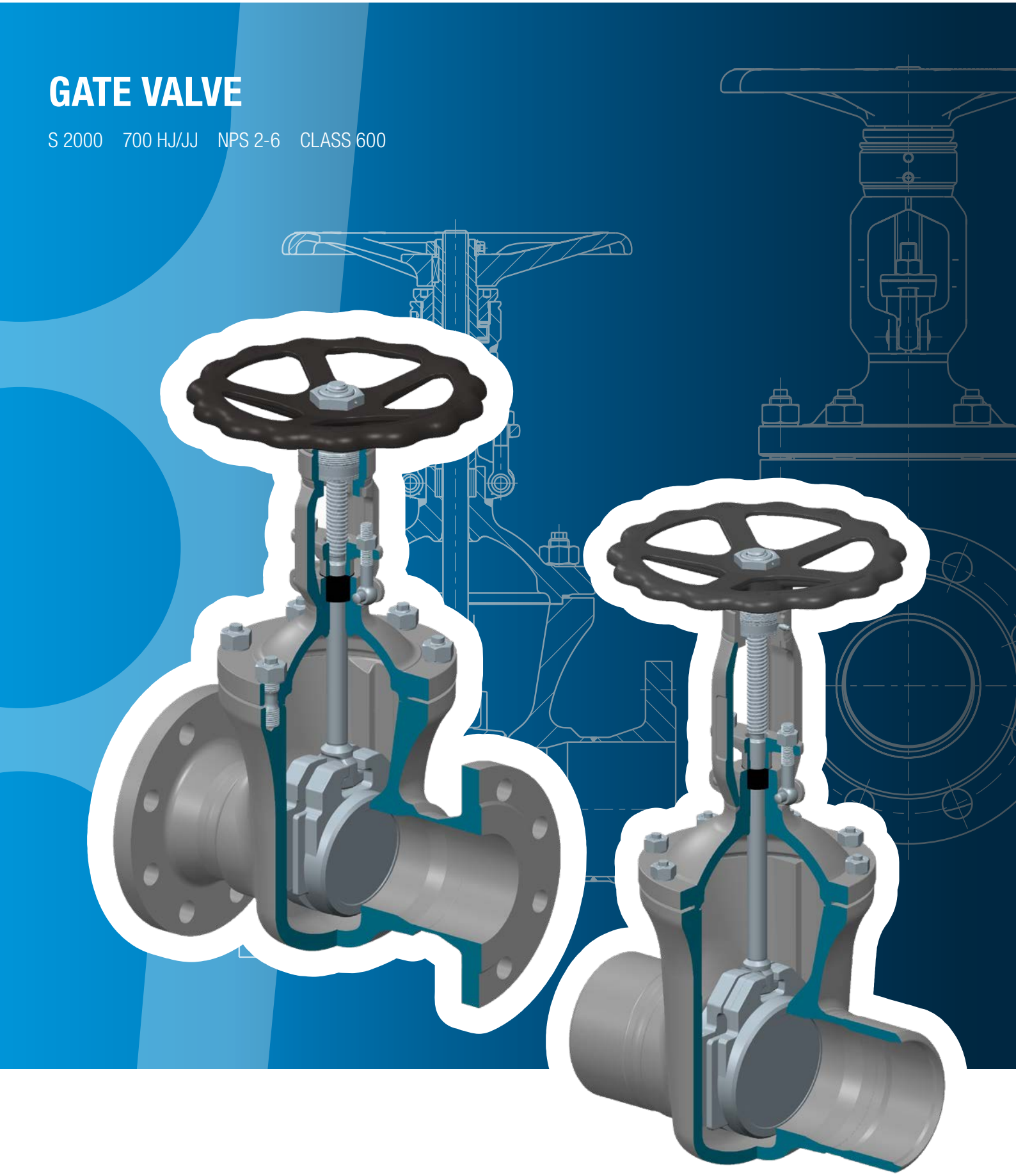

Subject to technical modifications

Design highlights

- The main valve body is one-piece die-forged incorporating the bonnet flange and the guide for the shut-off device
- Hard faced seats (valve body and shut-off device). Hardness app. 35-37 HRC
- Bolted bonnet with reduced shaft bolts
- Full bore, except NPS 2 1/2 and NPS 5
- Non - turning rising stem
- Type GA, turning non-rising stem

Advantages

- Die-forged parts, compared with cast steel parts are generally free from porosity and shrink holes. The special of the valve body minimizes the existance of welding seams
- Extremely resistant to wear
- To improve the stress capability when temperature and pressure fluctuate
- No reduction in seat area
- Minimum wear to the gland packing compared with ground stem surfaces
- Small dimensions

Version

- Split disc gate valve / 2 disc-design = Type JJ
- Wedge gate valve / Flexible wedge design = Type HJ
- Die-forged body and bonnet
- Full bore, exception NPS 2 1/2 and NPS 5
- Outside screw and yoke
- Non turning, rising stem
- Yoke sleeve
- Available with flange and buttweld ends

GA version option

- Wedge gate valve / Flexible wedge design
- Inside screw
- Non-rising turning stem

Pressure and temperature ra

- Up to standard or special class 600

Materials

- A 105
- A 182 F12 Cl.2
- A 182 F22 Cl.3

Other materials available on request.

Flow medium

Depending on the choice of materials, the gate valves can be used for water, steam, gas, oil or other non-aggressive media.

Applications

In chemical, industrial and power plants, and in shipbuilding.

Flange version

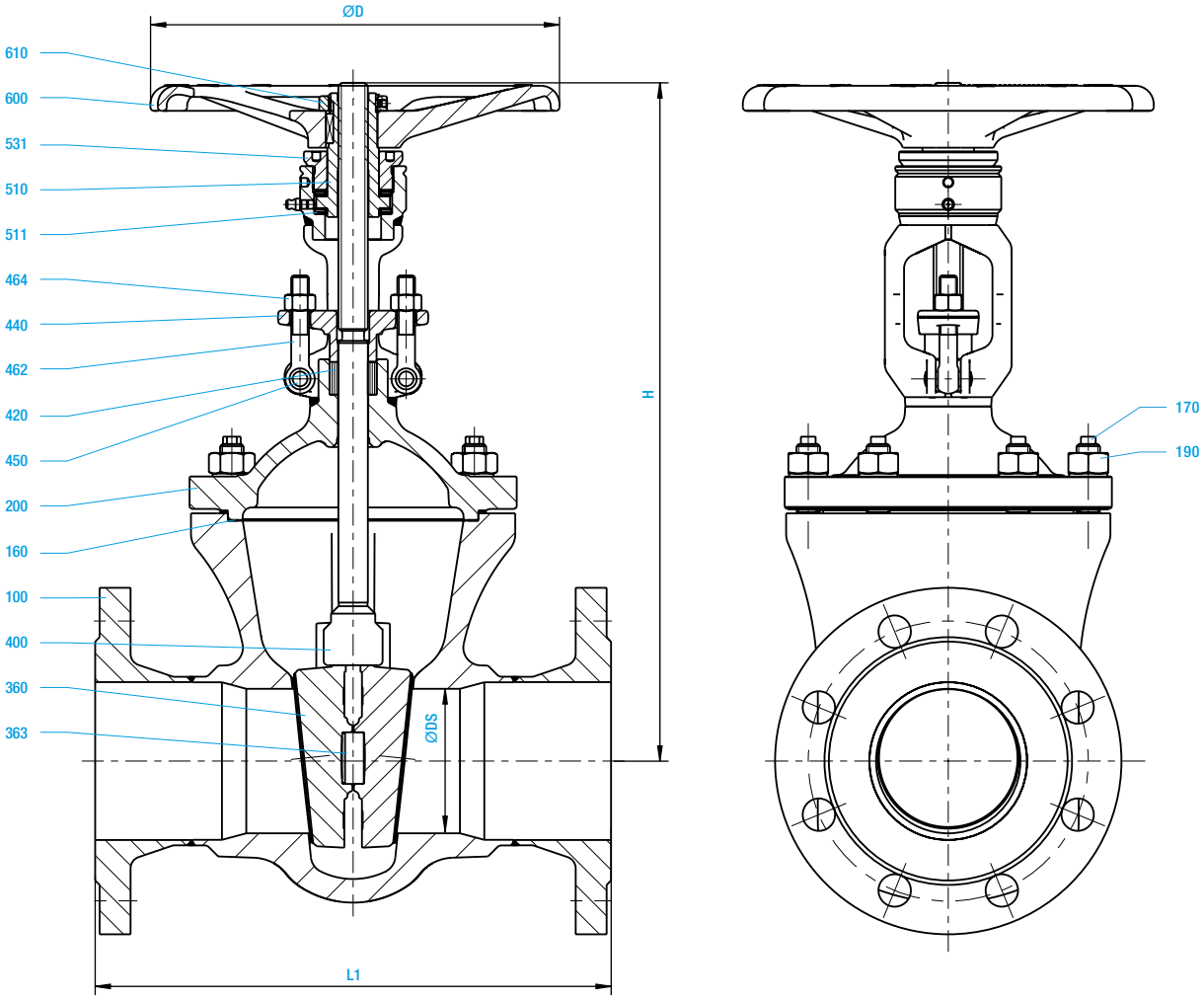

Butt-weld end version

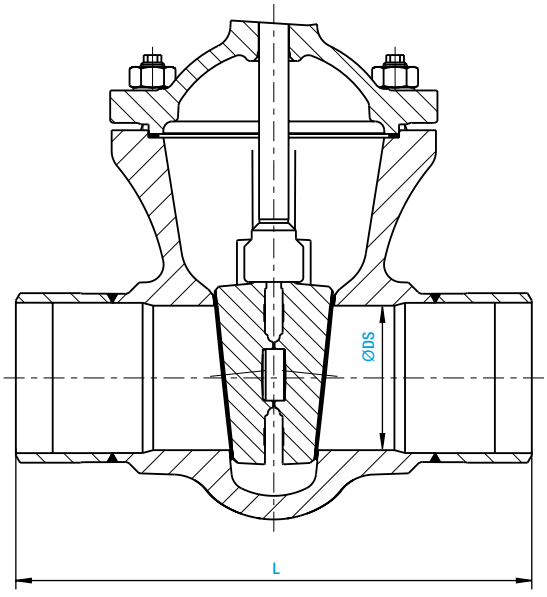

700 GA

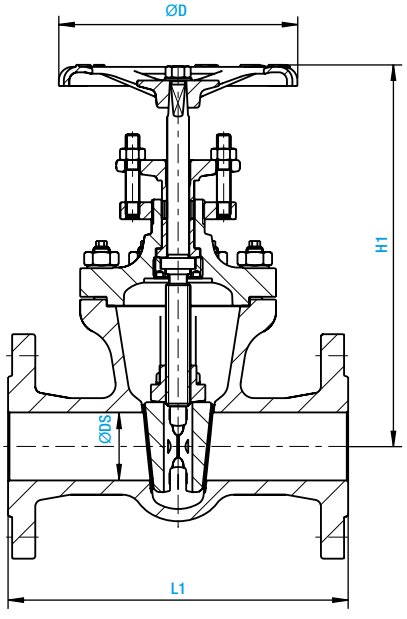

Subject to technical modifications

Materials

Item	Designation	ASTM A105 (B1)	ASTM A350 LF2 (B5)	ASTM A182 F12 (D4)	ASTM A182 F22 (D5)
100	Body	ASTM A105	ASTM A350 LF2	ASTM A182 F12	ASTM A182 F22
160	*Gasket*	*Graphite*	*Graphite*	*Graphite*	*Graphite*
170	Stud	ASTM A 193 B7	ASTM A 193 B7	ASTM A 193 B7	ASTM A 193 B16
190	Hexagonal nut	ASTM A 194 2H	ASTM A 194 2H	ASTM A 194 2H	ASTM A 194 4
200	Bonnet	ASTM A105	ASTM A350 LF2	ASTM A182 F12	ASTM A182 F22
360	*Disc*	*ASTM A105 [2)]*	*ASTM A350 LF2 [2)]*	*ASTM A182 F12 [1)]*	*ASTM A182 F22 [1)]*
363	Pressure piece	1.4021	1.4021	1.4021	1.4021
400	*Stem*	*1.4021*	*1.4571*	*1.4122*	*1.4122*
420	*Packing*	*Graphite*	*Graphite*	*Graphite*	
440	Gland flange	ASTM A105	ASTM A182 F316L	ASTM A105	ASTM A105
450	Pin	St	SS	St	St
462	Bolt	ASTM A 193 B7	ASTM A 193 B7	ASTM A 193 B7	ASTM A 193 B7
464	Hexagonal nut	ASTM A 194 2H	ASTM A 194 2H	ASTM A 194 2H	ASTM A 194 2H
510	*Yoke sleeve*	*1.0718*	*1.0718*	*1.0718*	*1.0718*
511	*Anti-friction bearing*	*WLSt*	*WLSt*	*WLSt*	*WLSt*
531	Screwing	1.0718	1.0718	1.0718	1.0718
600	Handwheel	5.3106	5.3106	5.3106	5.3106
610	Hexagonal nut	St	St	St	St

Spare parts

1) Armoured with Stellite
2) Armoured with 18/8

Dimensions (mm)

NPS	DN	ØD	ØDS	BW L	RF L1	H (closed)	H1 (closed)	Rotation/ Stroke
2	**50**	180	50	292.1	292.1	337	400	15
2 ½	**65/50**	180	50	330.2	330.2	337	400	15
3	**80**	225	78	355.6	355.6	410	500	22
4	**100**	360	98	431.8	431.8	505	615	22
5	**125/100**	360	98	508	508	505	615	22
6	**150**	360	150	558.8	558.8	685	850	27.5

Weights (kg), Cvs value (USG/min) and Kvs value (m^3/h)

NPS	DN	BW kg	RF kg	Flow Coefficient* Cv	Kvs
2	**50**	15.5	26.5	304	258
2 ½	**65/50**	16	30.5	304	258
3	**80**	31	45	739	628
4	**100**	47	71	1166	991
5	**125/100**	49	89	1166	991
6	**150**	100	155	2733	2323

* Deviations are possible due to changed connection dimensions

GATE VALVE

PD 18 700 JJ NPS 2-10 CLASS 900



Subject to technical modifications

Design highlights

- Die-forged valve body with incorporated seats
- Seats and disc faced with stellite
- Non-rising handwheel
- Non-turning, rising stem and burnished stem
- Hammer head connection between wedge and stem
- Gland ring and gland flange in two separate pieces
- Yoke sleeve supported at the top and at the bottom by means of needle bearings (axial type)
- Valve head equipped with dirt scrapers below and above the bearings

Advantages

- Free from porosity and shrink holes
- Best possible sliding performance, minimum wear
- Small dimensions
- Minimum wear to the gland packing
- The wedges are able to move parallel to the axis of the pipeline within the guiding groove. This protects the stem against bending moments
- Damage to the stem by irregular tightening of gland bolts is avoided
- To minimize the expenditure of effort when opening and closing the valve
- To protect against dirt and to avoid the loss of lubricants

Version

- Die-forged body
- Split disc type
- Incorporated seats
- Outside screw
- Gasket located in a groove
- Yoke sleeve with needle bearings
- Universal valve head for mounting actuators

Pressure and temperature ratings

- Up to standard class or special class 900

Materials

- A 105
- A 182 F12 Cl.2
- A 182 F22 Cl.3

Other materials available on request.

Flow medium

Depending on the choice of materials, the gate valves can be used for water, steam, oil or other non-aggressive media.

Applications

In chemical, industrial and power plants, and in shipbuilding.

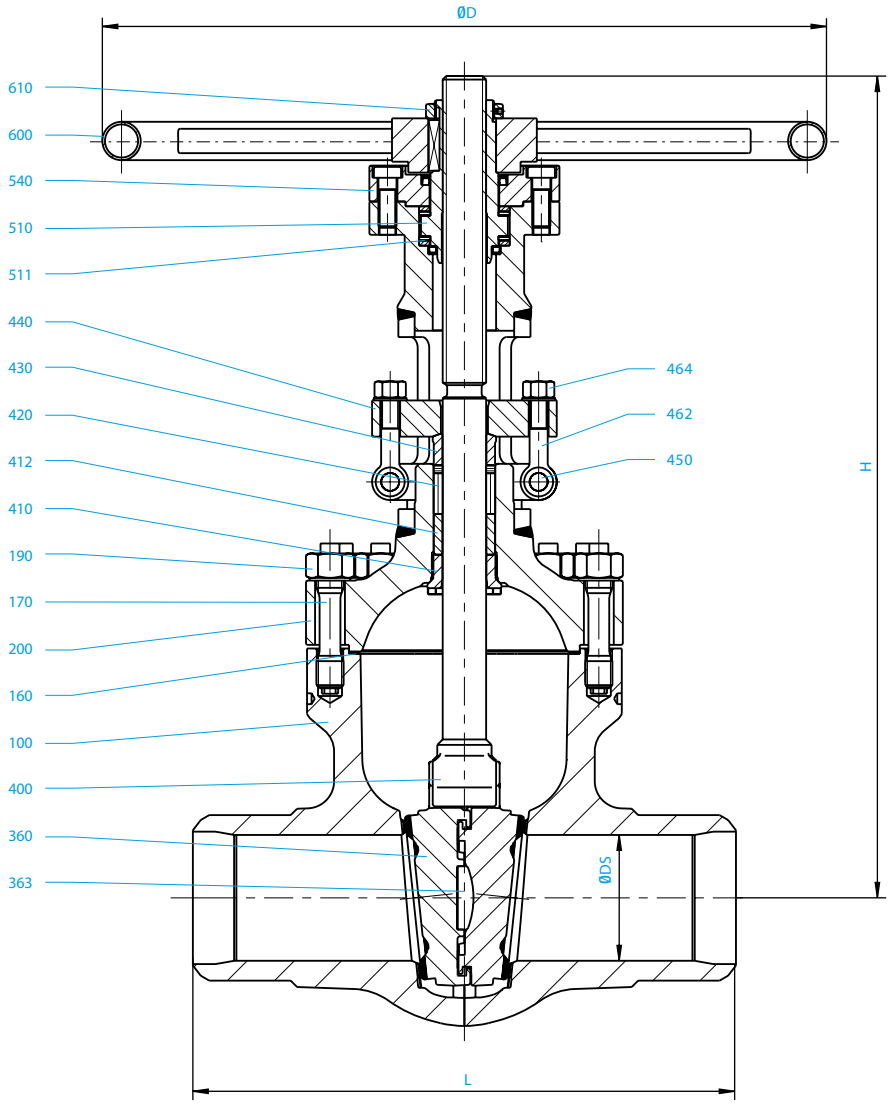

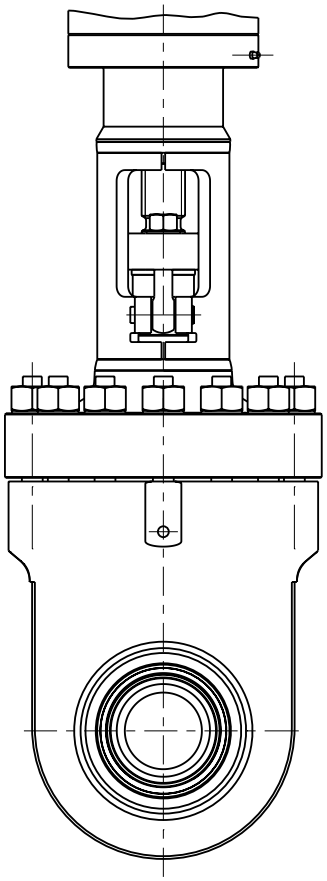

Flange version

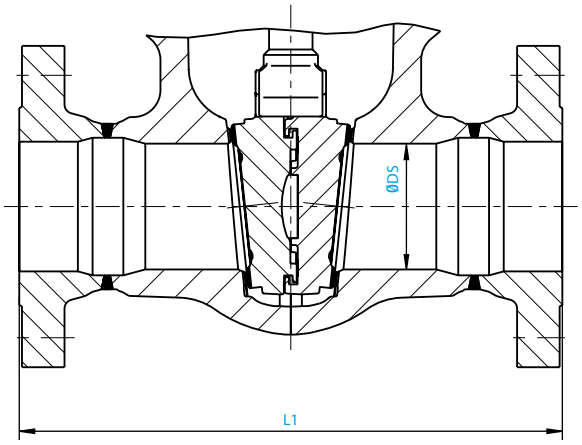

Version DN 50-80

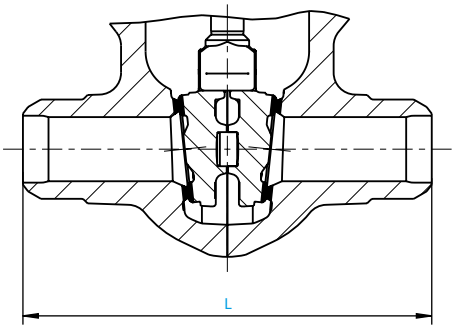

Subject to technical modifications

Materials

Item	Designation	ASTM A105 (B1)	ASTM A182 F12 (D4)	ASTM A182 F22 (D5)
100	Body	ASTM A105	ASTM A182 F22/ ASTM A182 F12 [1]	ASTM A182 F22 [1]
160	*Gasket*	*Grooved with graphite layer*	*Grooved with graphite layer*	*Grooved with graphite layer*
170	Stud	ASTM A 193 B7	ASTM A 193 B7	ASTM A 193 B16
190	Hexagonal nut	ASTM A 194 2H	ASTM A 194 2H	ASTM A 194 4
200	Bonnet	ASTM A182 F22	ASTM A182 F22	ASTM A182 F22
360	*Disc*	*ASTM A182 F22 [1]*	*ASTM A182 F22 [1]*	*ASTM A182 F22 [1]*
363	*Pressure piece*	*1.4122*	*1.4122*	*1.4122*
400	*Stem*	*1.4923*	*1.4923*	*1.4923*
410	Back seat bushing	1.4006	1.4006	1.4006
412	Guide sleeve	1.0718	1.0718	1.0718
420	*Packing*	*Graphite*	*Graphite*	*Graphite*
430	Gland ring	1.5415	1.5415	1.5415
440	Gland flange	1.5415	1.5415	1.5415
450	Grooved pin	St	St	St
462	Bolt	ASTM A 193 B16	ASTM A 193 B16	ASTM A 193 B16
464	Hexagonal nut	ASTM A 194 4	ASTM A 194 4	ASTM A 194 4
510	*Yoke sleeve*	*CW 713 R*	*CW 713 R*	*CW 713 R*
511	*Anti-friction bearing*	*WLSt*	*WLSt*	*WLSt*
540	Headcap screw	8.8	8.8	8.8
600	Handwheel	St	St	St
610	Hexagonal nut	St	St	St

Spare parts

1) Armoured with Stellite

Dimensions (mm)

NPS	DN	ØD	ØDS	BW L	RF L1	H (closed)	Stroke	Rotation/ Stroke	Flange F DIN/ISO 5210
2	50	360	47	215.9	368.3	490	80	16	F10
2 ½	65/50	360	47	254	419.1	490	80	16	F10
3	80	400	74	304.8	381	610	105	18	F14
4	100	500	95	355.6	457.2	695	130	18	F14
5	125/100	500	95	431.8	558.8	695	130	22	F14
6	150	800	139	508	609.6	890	185	21	F16
8	200	1000	183	660.4	736.6	1090	235	25	F25
10	250	1000	228	787.4	838.2	1275	270	29.5	F25

Weights (kg), Cvs value (USG/min) and Kvs value (m^3/h)

NPS	DN	BW kg	RF kg	Flow Coefficient* Cv	Kvs
2	50	45	368.3	263.6	228
2 ½	65/50	52	419.1	263.6	228
3	80	100	381	653.2	565
4	100	125	457.2	1075.1	930
5	125/100	130	558.8	1075.1	930
6	150	270	609.6	2306.3	1995
8	200	520	736.6	3997.5	3458
10	250	930	838.2	6204.3	5367

* Deviations are possible due to changed connection dimensions

DESIGN CHARACTERISTICS

Body

The body and cover or bonnet form the pressure bearing assembly and determine the application area of the valve. The demand for valves for ever higher pressures and temperatures requires special materials and production processes. Pressure ratings, nominal diameters and quantities in the high-pressure range require different manufacturing methods appropriate to the specific conditions. The designs therefore vary according to the specific conditions. Forged PERSTA valve bodies, particularly for power station, are closed or open die forgings, with a machined finish. Systematic rolling and forming processes give the formed parts an impermeable, homogeneous, fine-grained structure without cavities or pores and a fibre orientation that is ideally suited to the intended use.
The modern production methods result in an increased use of forged steel in the high-pressure range. However, there are limits to the development of die-forged bodies, due to the large forming forces involved and thus the size and cost of the dies needed. For this reason, open-die forging is used for large bodies, which are then machined afterwards.

For PERSTA high pressure valves, the following production methods have proofen effective:

1. Hollow forging from a single piece is primarily used for the DSK 10, DN 50-350 and DSK 26, DN 65-300/250 series. In the DSK 10 design, the valve flange or butt-weld end connections are welded on with a circumferential weld.

2. Two half shells forged in a die for the gate valve body or swing check valves in the PD 18 / PN 160, DN 50-300 series are joined by means of electron beam welding. Before welding, the seat surfaces are armoured with Stellite, rotated and finished.

3. Body for gate valves and swing check valves in the DSK 16-63, DN 50-600 series are forged solid as open-die parts with machined finish.
Valves are strained through:

- Mechanically by
  - Operating pressure
  - Operating temperature
  - Temperature gradients during start up and shutdown
  - Erosion and cavitation caused by the medium
  - By forces that are applied by the connected pipelines, by fastening equipment and the dead weight of the actuators
- Chemically by
  - Corrosion

Smooth transitions in the wall thickness limit thermal expansion in PERSTA valve bodies. In the case of gate valves, sealing takes place on the pressure-bearing side of the body. The sealing force required is applied by the medium due to the differential pressure. Rails or grooves guide the disc or the disc fittings in the body after around 10% opening stroke. The forces to be absorbed by the guides are relatively small because the pressures have largely equalised by the time this position is reached. The weld seams are designed to be process-compliant in terms of radiographic or ultrasonic testing. All PERSTA gate valves and swing check valves can be designed with shoed butt-weld ends to adjust to the respective pipeline materials and diameters.

Stem packing

The gland packing seals the stem guide externally. Strains on the seal are caused by movements of the stem, pressure and friction on the packing, thermal fluctuation, and by the medium. The design of the gland and gland flange ensures even pressing of the packing rings,
even if the packing bolts are tightened slightly unevenly, thereby preventing jamming of the stem.

Operating principle

A force applied by the stud bolts **(462)** to the gland **(440)** is transferred by the gland flange **(430)** and the chamber ring **(421)** to the packing rings **(420)**. This presses the packing rings together. The resultant surface pressure against the gland chamber and against the stem surface seals against the medium.

Subject to technical modifications

Operating principle

An axial force that increases as the internal pressure increases is applied to the elastic gasket ring **(160)**. This force presses the elastic gasket ring together and deforms it in the radial and axial directions. In the radial direction, it is pressed against the body wall and the cover **(270)**, thus providing the necessary surface pressure and sealing force.
The support ring **(271)** on the gasket ring absorbs the axial force and transmits it to the segment ring **(272)**. The segment ring is located in a groove in the body **(100)** and thus transmits the axial force positively locking to the body. The segment ring is made up of multiple parts and it is held in the body groove by the support cap **(273)**. The cover **(270)** is pretensioned by the clamping screws **(171)** in order to retain the deformation of the gasket ring (and thus the sealing effect) even when the internal pressure is low.

Unlike valves with a bolted bonnet or cover, in which the internal pressure is absorbed by the cover screws, the gasket ring of the pressure sealing bonnet is subjected to a force proportional to the internal pressure, which increases the sealing effect of the pressure sealing cover.

Segment ring

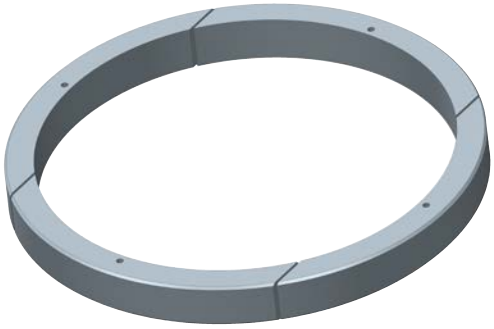

Attention: Over pressure safety devices may be needed to safeguard against impermissible pressures. See the section on over pressure safety devices

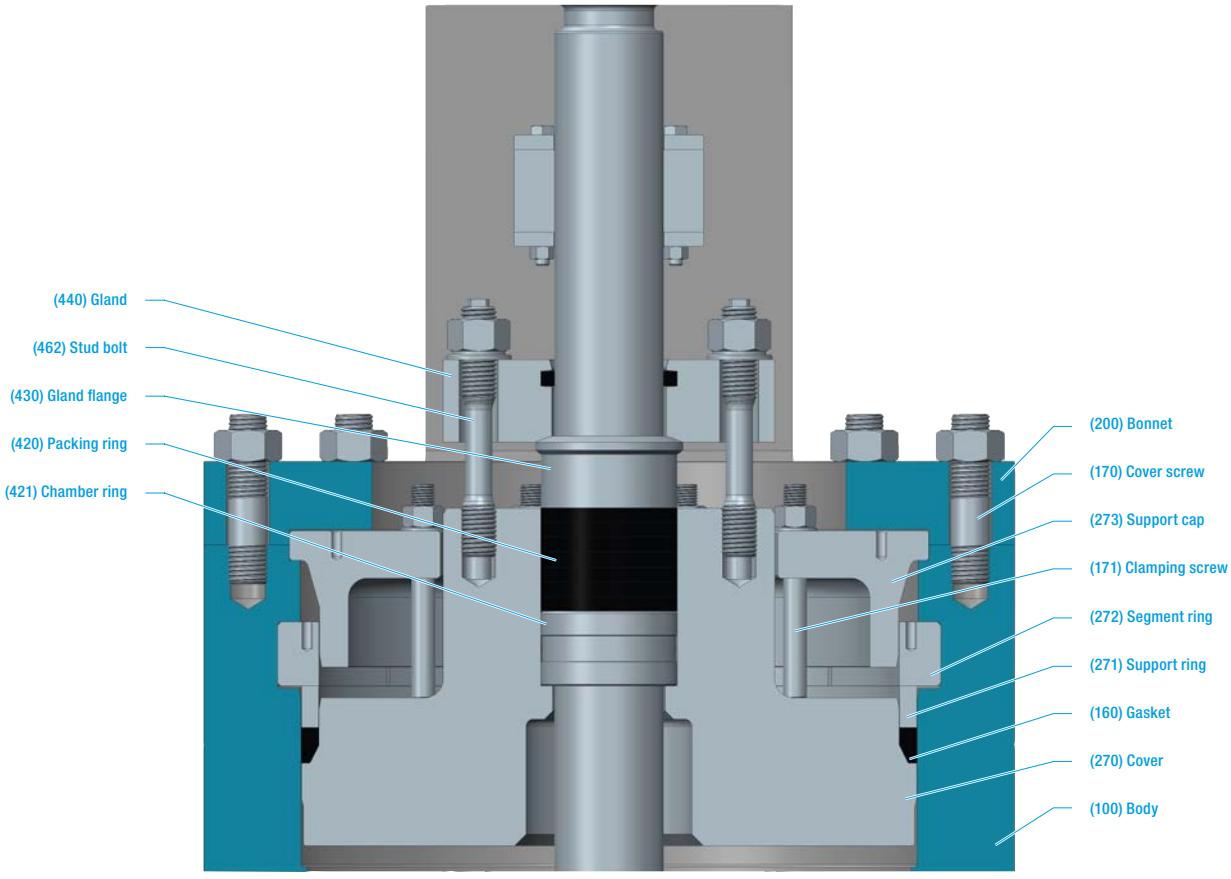

HIGH PRESSURE GATE VALVE

DSK 10 700 JT NPS 14-28 CLASS 725

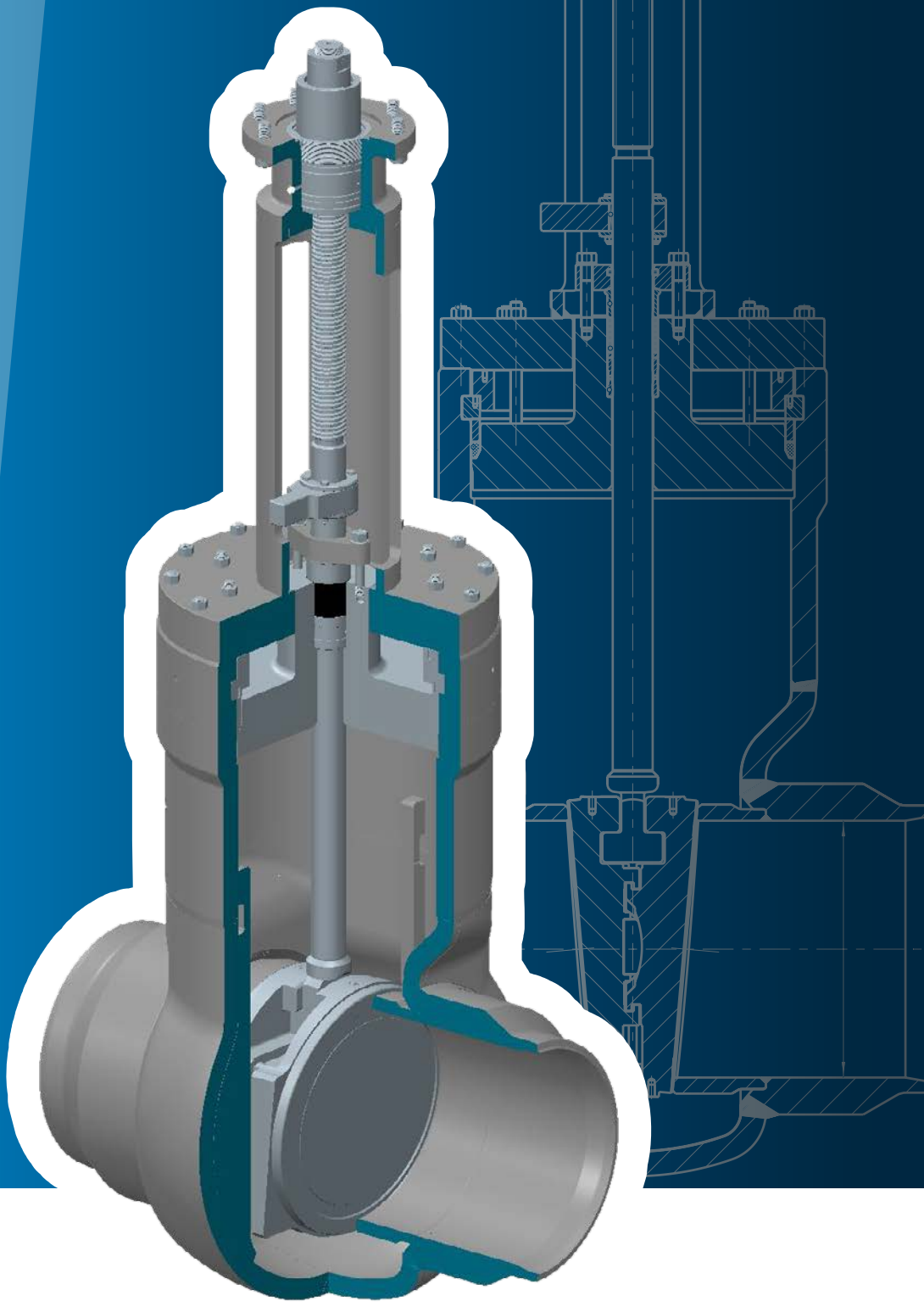

Subject to technical modifications

Design highlights

- Seats and disc faced with stellite
- Non-turning, rising stem
- Gland ring and gland flange in two separate pieces
- Yoke sleeve supported by needle bearing
- Pressure sealed bonnet

Advantages

- Best possible sliding performance, minimum wear
- Minimum wear to the gland packing
- Damage to the stem by irregular tightening of gland bolts is avoided
- Minimize the expenditure of effort when operating valve
- Best possible sealing function

Version

- Split disc gate valve
- Outside screw and yoke
- Non-turning, rising stem
- Yoke sleeve supported by needle bearings
- Pressure sealing bonnet acc. VGB-guidelines
- Easy assembly of an E-actuator

Materials

- A 105
- A 182 F12 Cl.2
- A 182 F22 Cl.3

Other materials available on request.

Operating data

- Design acc. ASME B31.3 - 304.7.2 max. rating similate to standard class 725

Flow medium

Depending on the choice of materials, the gate valves can be used for water, steam, oil or other non-aggressive media.

Applications

In chemical, industrial and power plants, and in shipbuilding.

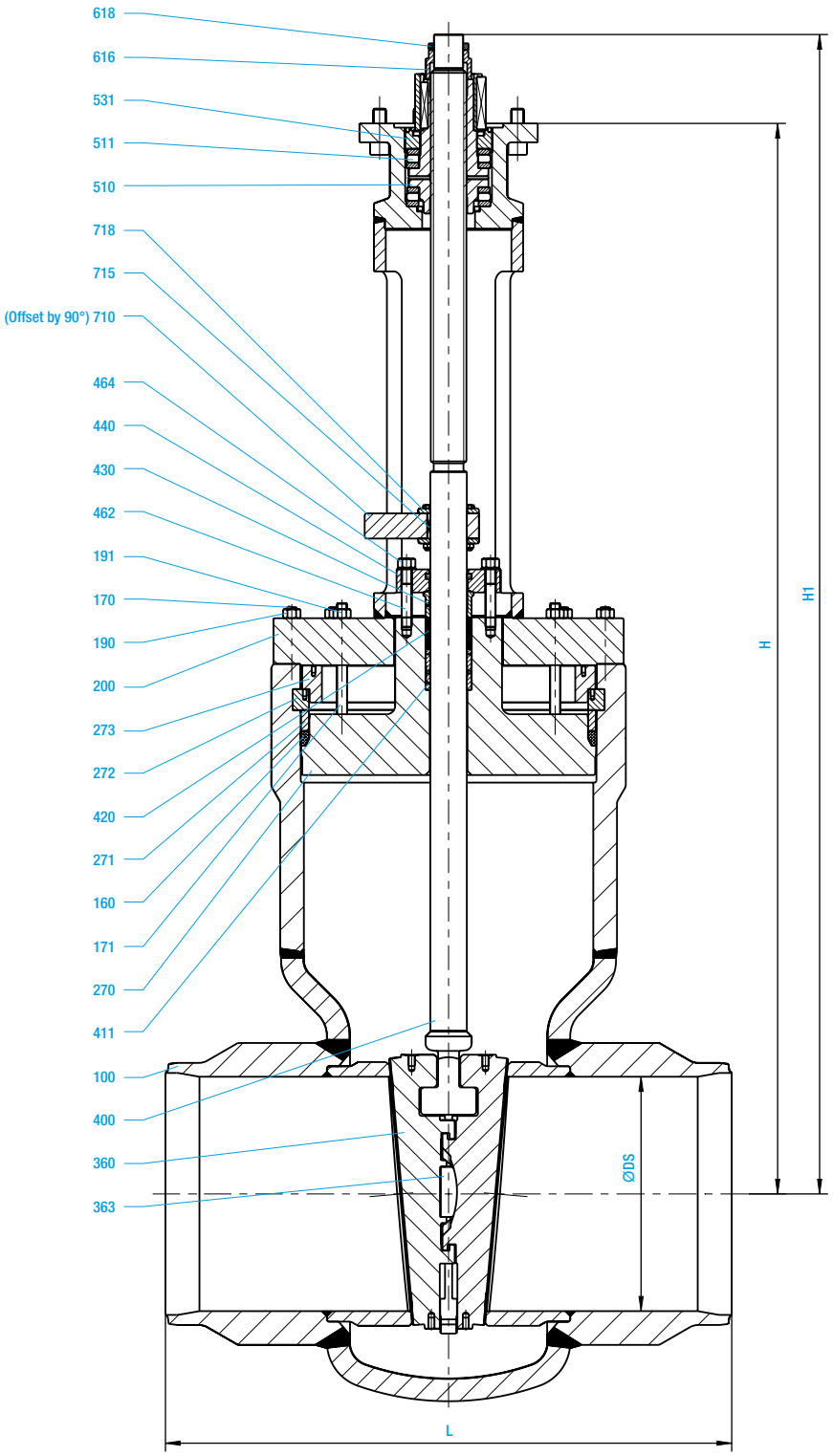

Subject to technical modifications

Materials

Item	Designation	ASTM A516 Gr 60 (B2)	ASTM A182 F12 (D4)	ASTM A182 F22 (D5)
100	Body	ASTM A516 Gr 60	ASTM A182 F12	ASTM A182 F22
	Body seat	Stellite	Stellite	Stellite
160	*Gasket*	*Graphite*	*Graphite*	*Graphite*
170	Bolt	ASTM A 193 B7	ASTM A 193 B7	ASTM A 193 B7
171	Clamping screw	ASTM A 193 B7	ASTM A 193 B7	ASTM A 193 B7
190	Hexagonal nut	ASTM A 194 2H	ASTM A 194 2H	ASTM A 194 2H
194	Hexagonal nut	ASTM A 194 2H	ASTM A 194 2H	ASTM A 194 2H
200	Bonnet	1.5415	1.5415	1.5415
270	Cover	ASTM A105	ASTM A182 F12	ASTM A182 F22
271	Support ring	ASTM A105	ASTM A182 F12	ASTM A182 F22
272	Segment ring	ASTM A105	ASTM A182 F12	ASTM A182 F22
273	Support cap	ASTM A105	ASTM A105	ASTM A105
360	*Disc*	*ASTM A105*	*ASTM A182 F12*	*ASTM A182 F22*
	Disc seat	*Stellite*	*Stellite*	*Stellite*
363	*Pressure piece*	*1.4122*	*1.4122*	*1.4122*
400	*Stem*	*1.4021*	*1.4923*	*1.4923*
411	*Guide sleeve*	*1.8507*	*1.8507*	*1.8507*
420	*Packing*	*Graphite*	*Graphite*	*Graphite*
430	Gland	1.5415	1.5415	1.5415
440	Gland flange	ASTM A105	ASTM A182 F12	ASTM A182 F22
462	Stud	ASTM A 193 B7	ASTM A 193 B7	ASTM A 193 B7
464	Hexagonal nut	ASTM A 194 2H	ASTM A 194 2H	ASTM A 194 2H
510	*Yoke sleeve*	*CW 713 R*	*CW 713 R*	*CW 713 R*
511	*Anti-friction bearing*	*WLSt*	*WLSt*	*WLSt*
531	Yoke nut	ASTM A182 F12	ASTM A182 F12	ASTM A182 F12
616	Screw pin	ASTM A105	ASTM A105	ASTM A105
618	Hexagonal nut	St	St	St
710	Switch bracket	ASTM A516 Gr 60	ASTM A516 Gr 60	ASTM A516 Gr 60
715	Key	1.4021	1.4021	1.4021
718	Washer	1.0038	1.0038	1.0038

Spare parts

Dimensions (mm)

Class 725			BW	H		Rotation/
NPS	DN	ØDS	L	(closed)	Stroke	Stroke
14	**350**	330	850	1730	365	365
16	**400**	375	950	1850	415	415
18	**450**	419	1050	2070	465	465
20	**500**	464	1150	2300	515	515
24	**600**	559	1350	2765	625	625
28	**700**	640	1550	2895	690	690

Weights (kg), Cvs value (USG/min) and Kvs value (m^3/h)

Class 725		BW	Flow Coefficient*	
NPS	DN	kg	Cv	Kvs
14	**350**	1054	12997	11243
16	**400**	1371	16786.3	14521
18	**450**	2000	20929.4	18105
20	**500**	2740	25840.1	22353
24	**600**	4614	37209.4	32188
28	**700**	5835	48289.6	41773

* Deviations are possible due to changed connection dimensions

HIGH PRESSURE GATE VALVE

DSK 26 700 JT NPS 2½-12 CLASS 1500-2500



Subject to technical modifications

Design highlights

- Long bonnet
- Seats of the shut-off device and of the valve body generally faced with stellite
- Non-rising handwheel
- Non-turning, rising stem and burnished stem
- Outside located switch-bracket
- Hammer head connection between shut-off device and stem
- Gland ring and gland flange in two separate pieces
- Yoke sleeve supported at the top and at the bottom by means of needle bearings (axial type)

Advantages

- To reduce temperatures
- Best possible sliding performance and minimum wear
- Small dimensions
- Minimum wear to the gland packing
- Protects against torsion of the stem
- The wedges are able to move parallel to the axis of the pipeline within the guiding groove. This protects the stem against bending moments
- Damage to the stem by irregular tightening of gland bolts is avoided
- Minimize the expenditure of effort when operating valve

Version

- Body made of forged steel
- Disc guided in groove
- Welded seat rings
- Outside screw and yoke
- Position indicator / Switch bracket
- Pressure sealing bonnet acc. to VGB-guidelines
- Yoke sleeve supported by needle bearing
- Possibility to add an actuator

Operating data

- Up to standard or special class 2500

Materials

- A 105
- A 182 F12 Cl.2
- A 182 F22 Cl.3
- A 182 F91
- A 182 F92

Other materials available on request.

Flow medium

Depending on the material the gate valves are suitable for water, gas, oil and other non aggressive media

Applications

High temperature steam and water, refining (catalytic reformers and hydrocrackers), petrochemical and chemical industries

DSK 26 CLASS 1500

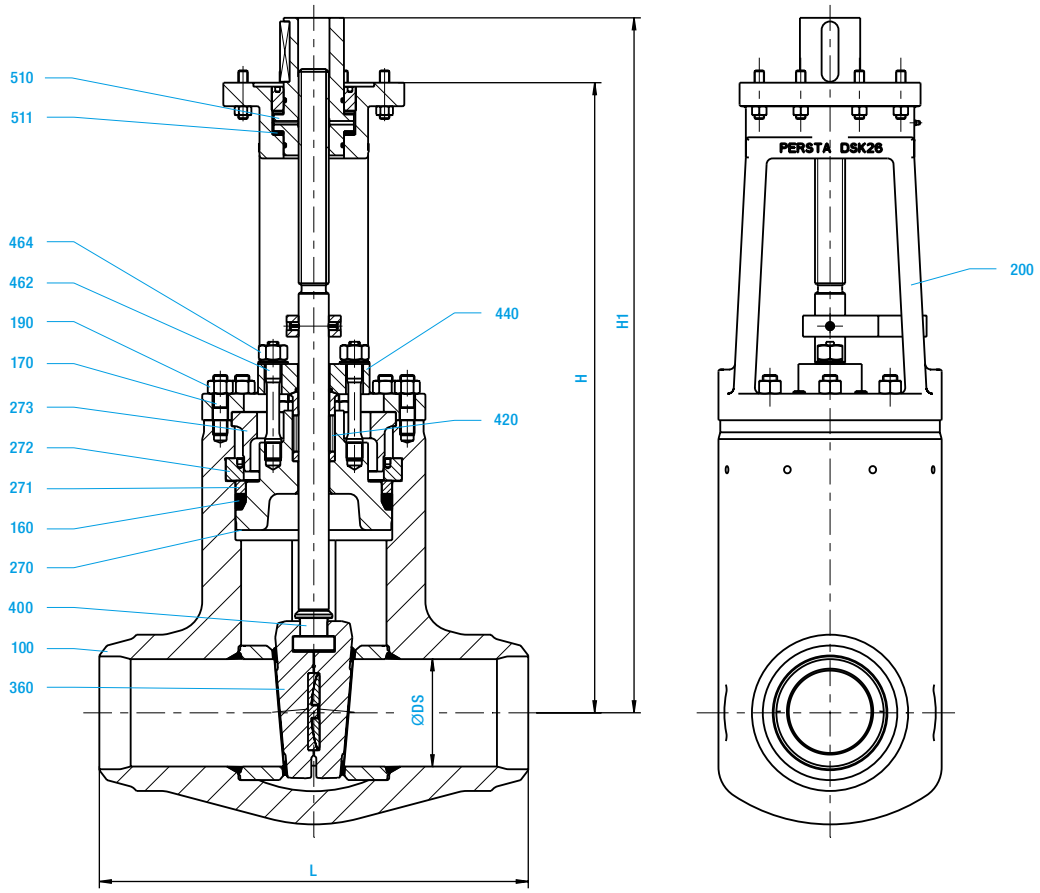

DSK 26 CLASS 2500

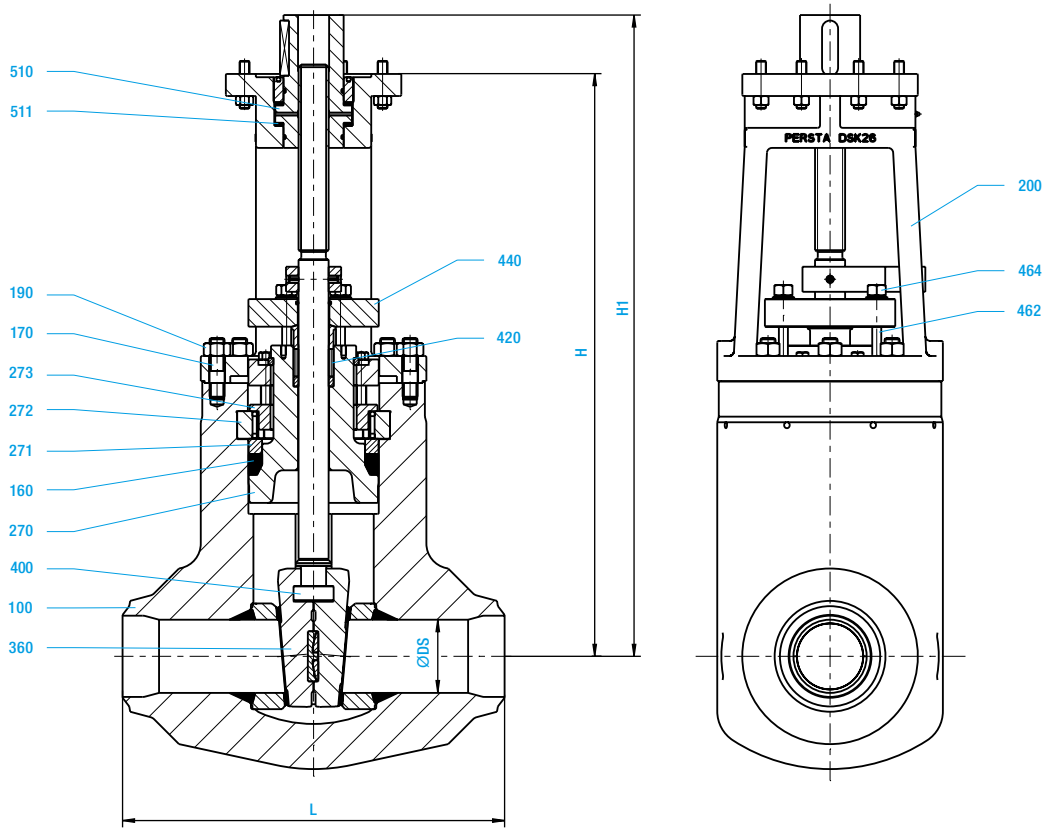

Subject to technical modifications

Materials

Item	Designation	A 105 (B1)	A 182 F12 (D4)	A 182 F22 (D5)	A 182 F91 (F3)	A 182 F92 (F6)
100	Body	A 105	A 182 F12 Cl.2	A 182 F22 Cl.3	A 182 F91	A 182 F92
	Body seat	Stellite	Stellite	Stellite	Stellite	Stellite
160	*Gasket*	*Graphite*	*Graphite*	*Graphite*	*Graphite*	*Graphite*
170	Stud	A 193 B7	A 193 B7	A 193 B7	A 193 B16	A 193 B16
190	Hexagonal nut	A 194 2H	A 194 2H	A 194 2H	A 194 4	A 194 4
200	Bonnet	1.5419	1.5419	1.5419	1.5419	1.5419
270	Cover	A 182 F22 Cl.3	A 182 F22 Cl.3	A 182 F22 Cl.3	A 182 F91	A 182 F92
271	Support ring	A 182 F22 Cl.3	A 182 F22 Cl.3	A 182 F22 Cl.3	A 182 F91	A 182 F92
272	Segment ring	A 182 F22 Cl.3	A 182 F22 Cl.3	A 182 F22 Cl.3	A 182 F91	A 182 F92
273	Support cap	1.5419	1.5419	1.5419	1.5419	1.5419
360	*Disc*	*A 182 F22 Cl.3*	*A 182 F22 Cl.3*	*A 182 F22 Cl.3*	*A 182 F91*	*A 182 F92*
	welded on with	*Stellite*	*Stellite*	*Stellite*	*Stellite*	*Stellite*
400	*Stem*	*1.4122*	*1.4122*	*1.4122*	*1.4123*	*1.4980*
	Stem from 570 °C			*1.4980*	*1.4980*	
420	*Packing*	*Graphite*	*Graphite*	*Graphite*	*Graphite*	*Graphite*
440	Gland flange	1.7380	1.7380	1.7380	1.7380	1.7380
462	Stud	A 193 B7	A 193 B7	A 193 B7	A 193 B16	A 193 B16
464	Hexagonal nut	A 194 2H	A 194 2H	A 194 2H	A 194 4	A 194 4
510	*Yoke sleeve*	*CW713R*	*CW713R*	*CW713R*	*CW713R*	*CW713R*
511	*Anti-friction bearing*	*WLSt*	*WLSt*	*WLSt*	*WLSt*	*WLSt*

Spare parts

Dimensions (mm)

Class 1500 NPS	DN	ØDS	BW L	H (closed)	H1 (open)	Rotation/ Stroke	Flange F DIN/ISO 5210
3	80	70	305	511	556	16	F10 (F14)
4	100	90	406	606	658	18	F14
5	125/100	111	483	720	781	21	F14
6	150	136	559	872	952	22	(F14) F16
8	200	178	711	1045	1078	24	(F16) F25
10	250	222	864	1240	1267	28	(F25) F30
12	300	263	991	1497	1528	29	F30

Class 2500 NPS	DN	ØDS	BW L	H (closed)	H1 (open)	Rotation/ Stroke	Flange F DIN/ISO 5210
2 1/2	65	50	330	466	518	19	(F10) F14
3	80	57	368	485	638	21	F14
4	100	72	457	656	713	15	F14
5	125	90	580	725	795	15	F16
6	150	111	925	1040	1090	15	(F16) F25
8	200	146	762	1165	1195	18	(F25) F30
10	250	185	1270	1440	1475	21	(F30) F35

Weights (kg), Cvs value (USG/min) and Kvs value (m^3/h)

Class 1500 NPS	DN	BW kg	Flow Coefficient* Cv	Kvs
3	80	73	585	505
4	100	128	1010	875
5	125	208	1470	1270
6	150	395	2210	1910
8	200	608	3780	3270
10	250	1120	5880	5080
12	300	1814	8254	7140

Class 2500 NPS	DN	BW kg	Flow Coefficient* Cv	Kvs
3	80	83	240	210
4	100	135.7	360	310
5	125	218.8	585	505
6	150	426.6	960	835
8	200	748.8	1710	1485
10	250	1185.9	2545	2200
12	300	2211.5	4085	3530

* Deviations are possible due to changed connection dimensions

HIGH PRESSURE GATE VALVE

DSK 27 700 JT NPS 2½-24 CLASS 900-4500

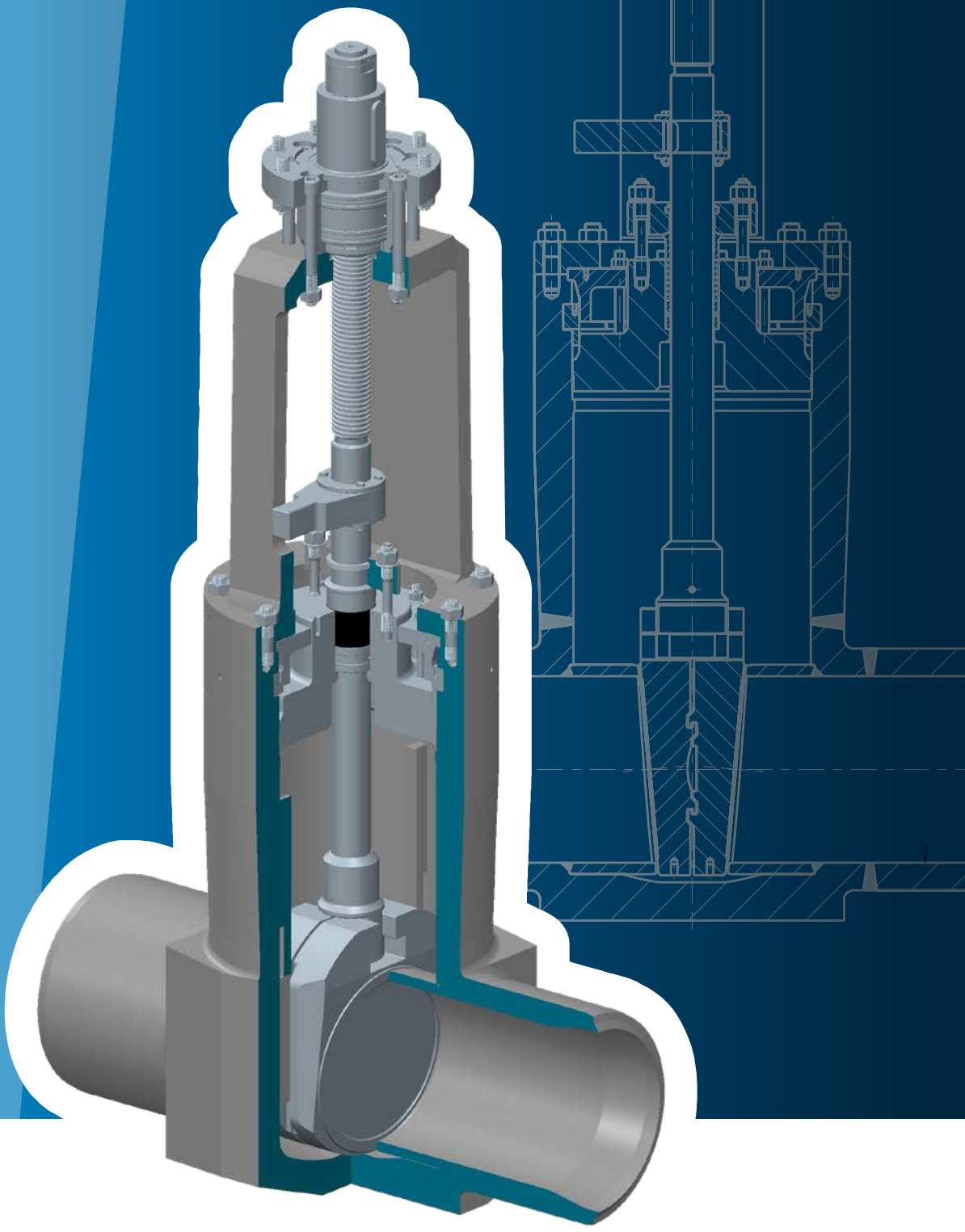

Subject to technical modifications

Design highlights

- Long bonnet
- Seats and discs faced with stellite
- Non-turning, rising stem and burnished stem
- Outside located switch bracket
- Hammer head connection between shut-off device and stem
- Gland flange and gland ring in two separate pieces
- Yoke sleeve supported by needle bearing

Advantages

- To reduce temperatures
- Best possible sliding performance and minimum wear
- Minimum wear to the gland packing
- Protects against torsion
- Wedge are able to aligne parallel to the axis of the pipe shut-off device and stem within the guiding groove. This protects the stem against bending moments
- Damage to the stem by irregular tightening of gland bolts is avoided
- Minimize the expenditure of effort when operating valve

Version

- Valve body made of forged steel
- Split disc type
- Welded seatrings and guide bars
- Outside screw and yoke
- Position indicator / non-rotating device
- Pressure sealing bonnet acc. VGB-guidelines
- Yoke sleeve supported by needle bearing
- Possibility to add an actuator

Materials

- A 105
- A 182 F12 Cl.2
- A 182 F22 Cl.3
- A 182 F91
- A 182 F92

Other materials available on request.

Operating data

- Up to standard class or special class 4500

Flow medium

Depending on the choice of materials, the gate valves can be used for water, steam, oil or other non-aggressive media.

Applications

High temperature steam and water, refining (catalytic reformers and hydrocrackers), petrochemical and chemical industries.

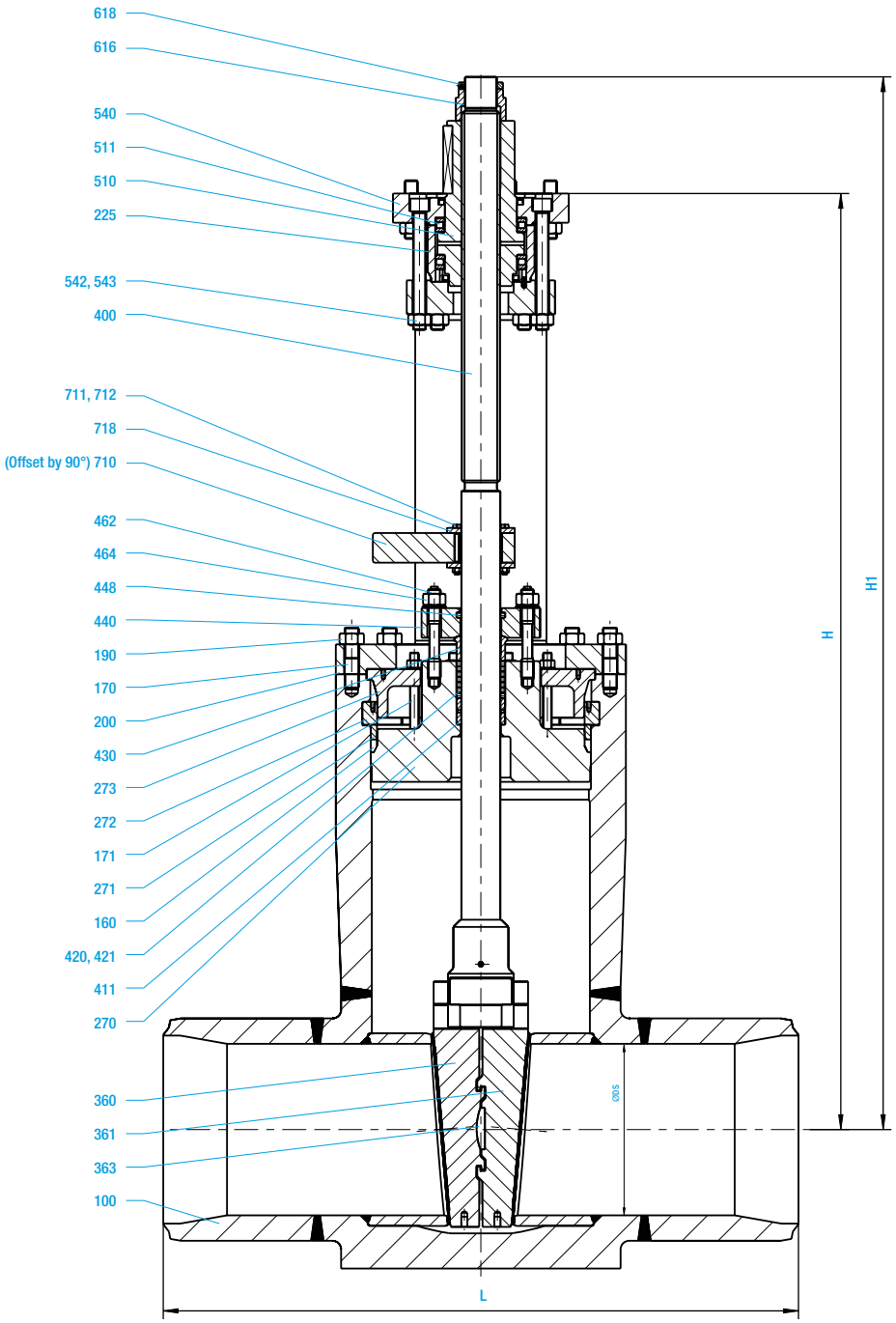

Subject to technical modifications

Materials

Item	Designation	ASTM A105 (B1)	ASTM A182 F12 (D4)	ASTM A182 F22 (D5)	ASTM A182 F91 (F3)	ASTM A182 F92 (F6)
100	Body	ASTM A105	ASTM A182 F12	ASTM A182 F22	ASTM A182 F91	ASTM A182 F92
	welded on with	Stellite	Stellite	Stellite	Stellite	Stellite
160	*Gasket*	*Graphite*	*Graphite*	*Graphite*	*Graphite*	*Graphite*
170	Stud	ASTM A193 B7	ASTM A193 B7	ASTM A193 B16	ASTM A453 GR660	ASTM A453 GR660
171	Stud	ASTM A193 B7	ASTM A193 B7	ASTM A193 B7	ASTM A453 GR660	ASTM A453 GR660
190	Hexagonal nut	ASTM A194 2H	ASTM A194 2H	ASTM A194 4	ASTM A453 GR660	ASTM A453 GR660
200	Bonnet	ASTM A182 F22	ASTM A182 F22	ASTM A182 F22	ASTM A182 F22	ASTM A182 F22
225	Yoke head	ASTM A105	ASTM A105	ASTM A105	ASTM A105	ASTM A105
270	Cover	ASTM A105	ASTM A182 F12	ASTM A182 F22	ASTM A182 F91	ASTM A182 F92
271	Ring	ASTM A105	ASTM A182 F12	ASTM A182 F22	ASTM A182 F91	ASTM A182 F92
272	Segment ring	ASTM A105	ASTM A182 F12	ASTM A182 F22	ASTM A182 F91	ASTM A182 F92
273	Cover	ASTM A105	ASTM A182 F12	ASTM A182 F22	ASTM A182 F91	ASTM A182 F92
360 / 361	*Disc*	*ASTM A105*	*ASTM A182 F12*	*ASTM A182 F22*	*ASTM A182 F91*	*ASTM A182 F92*
	welded on with	*Stellite*	*Stellite*	*Stellite*	*Stellite*	*Stellite*
363	*Pressure piece*	*1.4122*	*1.4122*	*1.4122*	*1.4122*	*1.4122*
400	*Stem*	*1.4021*	*1.4923*	*1.4923*	*1.4923*	*ASTM A453 GR660*
411	*Guide bushing*	*1.8507*	*1.8507*	*1.8507*	*1.8507*	*1.8507*
420	*Packing*	*Graphite*	*Graphite*	*Graphite*	*Graphite*	*Graphite*
421	*Ring*	*Graphite*	*Graphite*	*Graphite*	*Graphite*	*Graphite*
430	Gland	1.5415	1.5415	1.5415	1.5415	1.5415
440	Gland flange	ASTM A105	ASTM A182 F12	ASTM A182 F22	ASTM A182 F91	ASTM A182 F91
448	*Dirt scraper*	*Graphite*	*Graphite*	*Graphite*	*Graphite*	*Graphite*
462	Stud	ASTM A193 B7	ASTM A193 B7	ASTM A193 B16	ASTM A453 GR660	ASTM A453 GR660
464	Hexagonal nut	ASTM A194 2H	ASTM A194 2H	ASTM A194 4	ASTM A453 GR660	ASTM A453 GR660
510	*Yoke sleeve*	*CW 713 R*	*CW 713 R*	*CW 713 R*	*CW 713 R*	*CW 713 R*
511	*Bearing*	*WLSt*	*WLSt*	*WLSt*	*WLSt*	*WLSt*
540	Flange	ASTM A516 Gr 60	ASTM A516 Gr 60	ASTM A516 Gr 60	ASTM A516 Gr 60	ASTM A516 Gr 60
542	Headcap screw	8.8	8.8	8.8	8.8	8.8
543	Hexagonal nut	8	8	8	8	8
550 / 551	*Gasket*	*NBR*	*NBR*	*NBR*	*NBR*	*NBR*
616	Screw ring	ASTM A105	ASTM A105	ASTM A105	ASTM A105	ASTM A105
618	Hexagonal pipe nut	St	St	St	St	St
710	Switch bracke	ASTM A516 Gr 60	ASTM A516 Gr 60	ASTM A516 Gr 60	ASTM A516 Gr 60	ASTM A516 Gr 60
711	Hexagonal screw	8.8	8.8	8.8	8.8	8.8
712	Hexagonal nut	8	8	8	8	8
718	Washer	1.0038	1.0038	1.0038	1.0038	1.0038

Spare parts

Dimensions (mm)

Class 900 NPS	DN	ØDS	BW L	H (closed)	H1	Stroke	Rotation/ Stroke	Flange F DIN/ISO 5210
14	350	315	1200	2140	2400	360	350	F30
16	400	360	1350	2320	2600	400	400	F30
18	450	405	1500	2485	2850	456	445	F35
20	500	450	1650	2850	3200	495	495	F35
24	600	540	1650	3250	3250	588	49	F35/F40

Class 1500 NPS	DN	ØDS	BW L	H (closed)	H1	Stroke	Rotation/ Stroke	Flange F DIN/ISO 5210
14	350	315	1550.0	2280	2550	350	350	F30/F35
16	400	360	1750.0	2565	2875	410	410	F35
18	450	405	1950.0	2850	3200	460	460	F35

* Deviations are possible due to changed connection dimensions

Weights (kg), Cvs value (USG/min) and Kvs value (m³/h)

Class 900 NPS	DN	BW kg	Flow Coefficient* Cv	Kvs
14	350	2230	12016	10214
16	400	3000	15694	13340
18	450	3935	19864	16884
20	500	5400	24522	20844
24	600	6120	34698	30015

Class 1500 NPS	DN	BW kg	Flow Coefficient* Cv	Kvs
16	400	5500	12016	13340
18	450	7700	15694	16884
20	500	7600	19864	20844

Class 2500 and above on request.

Over pressure safety device

If a gate valve that is closed and is filled with a medium (e.g. water) is heated up (Fig. 1), an impermissibly high pressure may form in the body. The possible pressure increase depends on the volume of the liquid and vaporous phases and the temperature increase of the medium. The trapped over pressure in the body can make it significantly harder for the gate valve to actuate. In addition, the over pressure can cause the pressure-bearing components to fail.

Fig. 2 shows the pressure increase in the body when water is trapped, depending on the volume share and temperature change.
Note: If the valve's installation method or mode of operation make these impermissible pressures possible, the system planner or operating company must provide a suitable over pressure safety device.

A simple and effective over pressure safety device involves providing a bore in the disc or in the seat on the pressurised side (Fig. 4). The bore prevents the pressure in the body from exceeding the operating pressure; however, this means that the gate valve can only be used one-directional. In this case, the flow direction is indicated by an arrow on the body. Another option is an equalizing pipe from the 3rd chamber (Fig. 5) to the inlet.

If an external over pressure safety device is used, the body must be ordered with the corresponding closed stud (see Figs. 1 + 3).

Fig. 1:

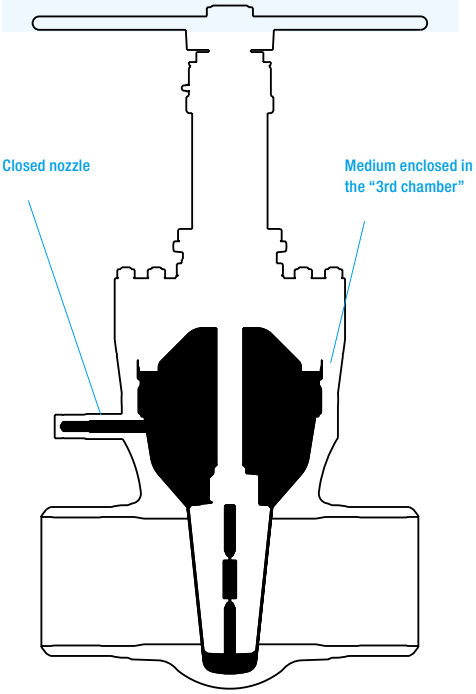

Fig. 2:

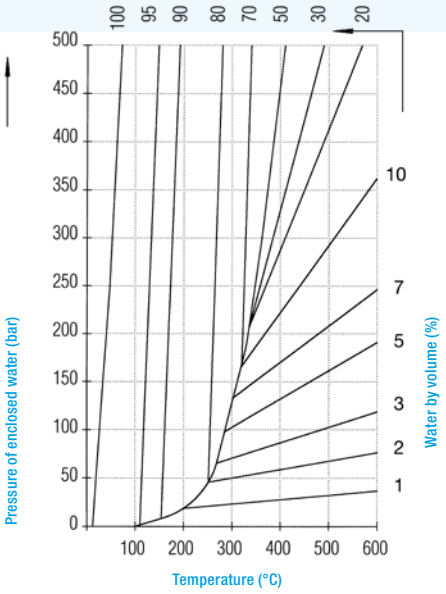

Fig. 3: Version with safety valve

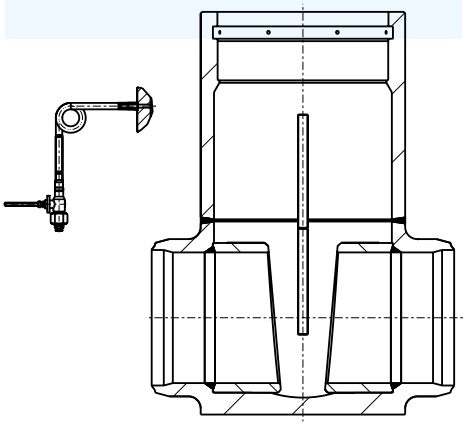

Fig. 4: Version with bore in disc or seat ring

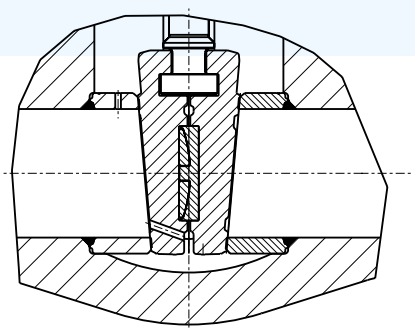

Fig. 5: Equalizing pipe from 3rd chamber to pressurised side

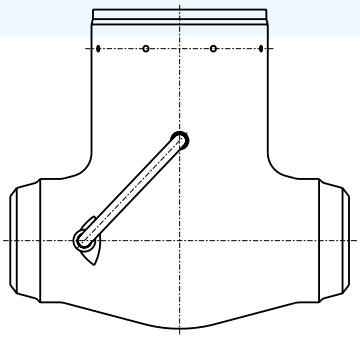

Fig. 6: Equalizing bypass with globe valves from 3rd chamber

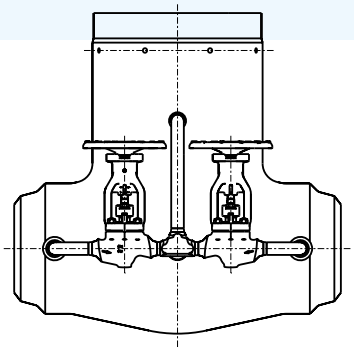

Subject to technical modifications

Assembly diagram SV 97

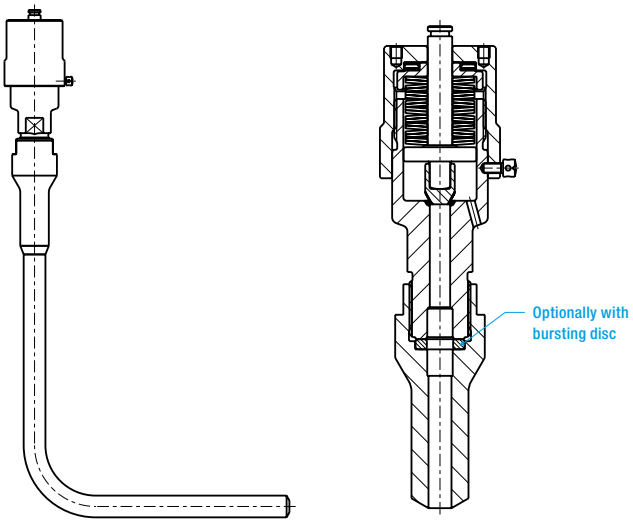

Assembly diagram SV 98

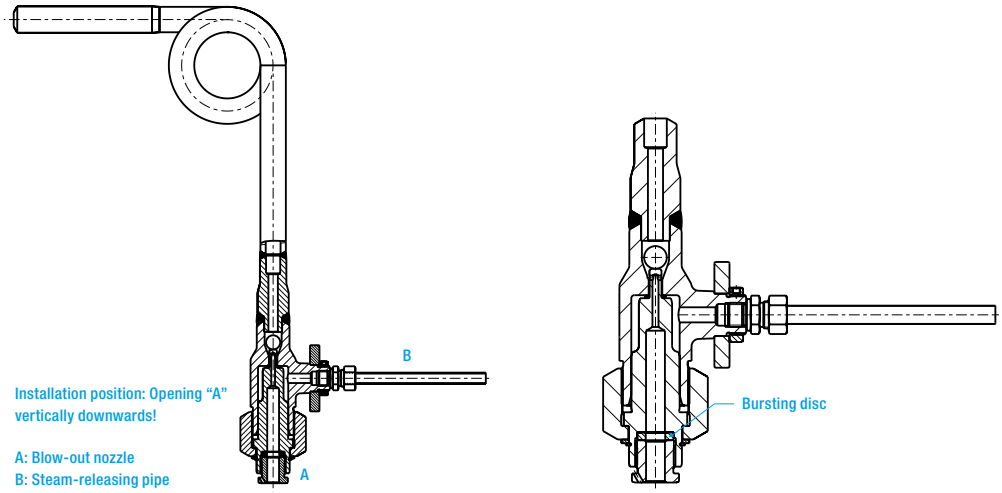

Assembly diagram SV 99 with lockable high pressure globe valve

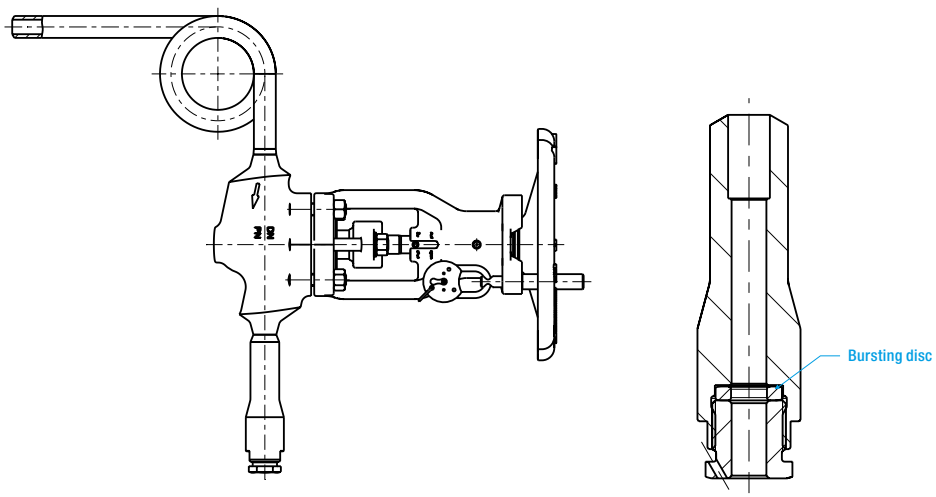





PERCON piston drive

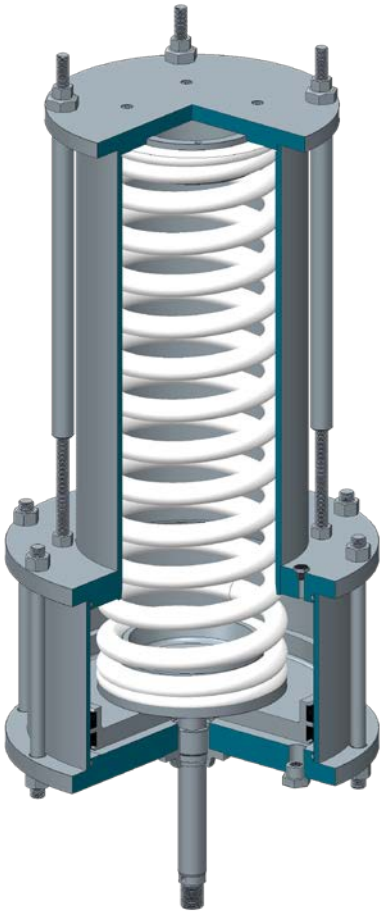

Subject to technical modifications

PERSTA globe valves

In direction CLOSED (clockwise) the actuator is switched off by the torque switch **(DSR)**. In direction OPEN (counterclockwise) the actuator is switched off by the limit switch **(WÖL)**.
The torque switch **(DÖL)** acts as an overload protection over full travel and should therefore also be connected.
Valves with electric actuators are set according to the operating requirements and undergo a test run at the PERSTA plant.



Switch wiring over full travel

PERSTA high pressure gate valves and stop check valve 640 type ST

In direction CLOSED (clockwise) the actuator is switched off by the limit switch **(WSR)**. In direction OPEN (counterclockwise) the actuator is also switched off by the limit switch **(WÖL)**.
The torque switch in direction CLOSED **(clockwise DSR)** and in direction OPEN **(counterclockwise, DÖL)** act as overload protection over full travel and should also be connected.
Valves with electric actuators are set according to the operating requirements and undergo a test run at the PERSTA plant.

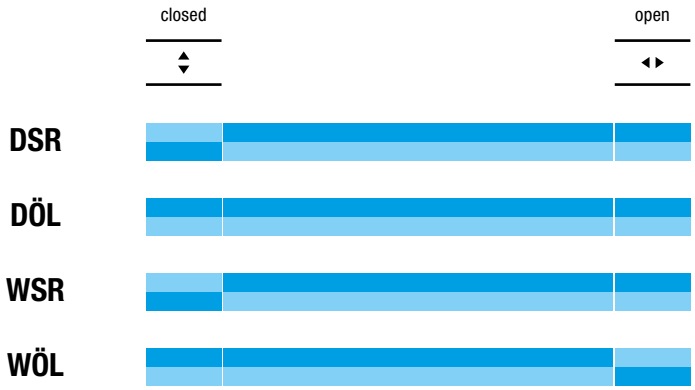

Switch wiring over full travel

SWING CHECK VALVES

PD 18 640 AA NPS 2-10 CLASS 900

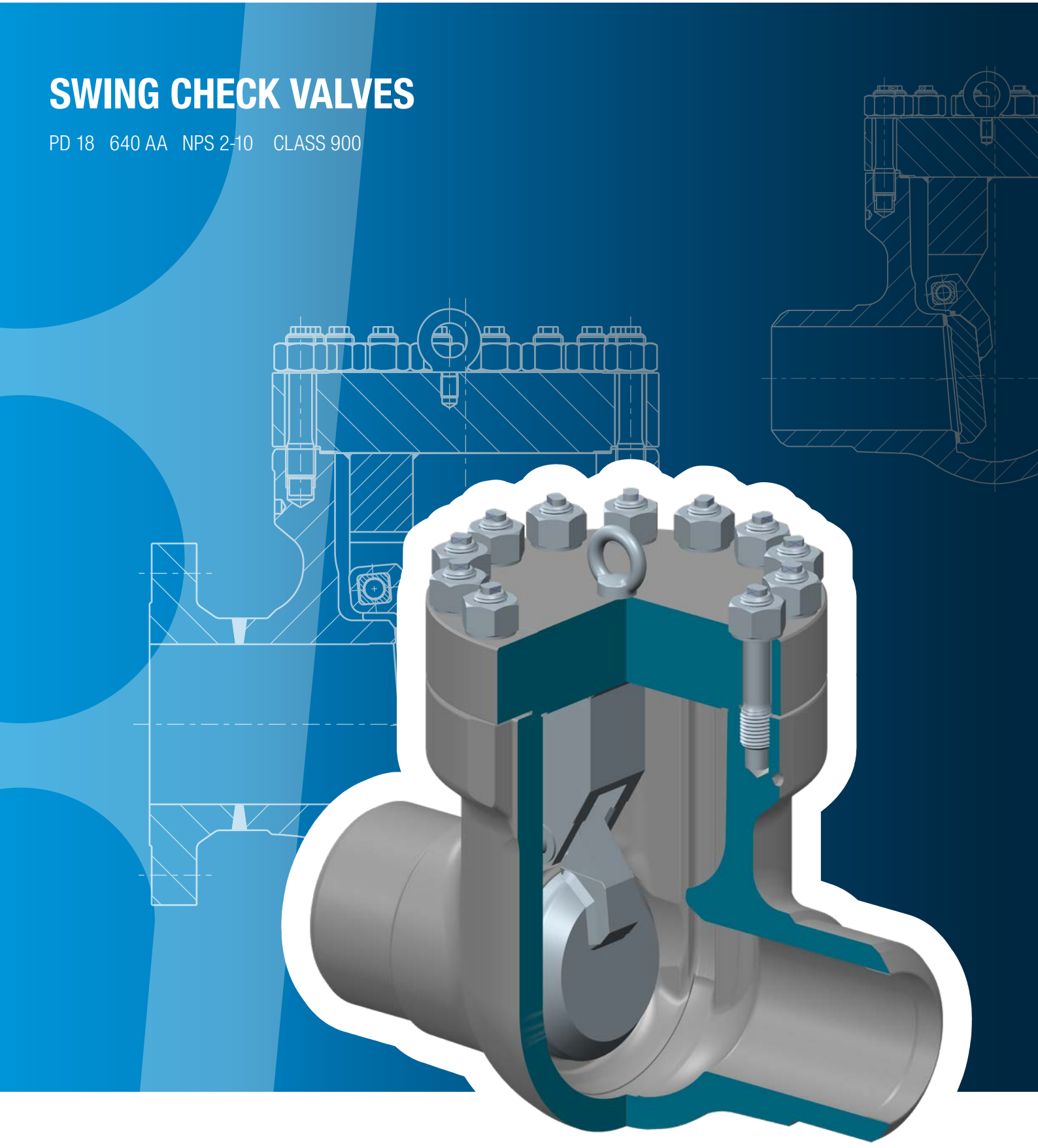

Subject to technical modifications

Design highlights

- Die-forged body
- Integral seat
- Lever rests on the hinge pin by means of the guide bush
- Bolted bonnet with reduced-shaft bolts
- Fastening of the disc at the cover

Advantages

- Free from porosity and shrink holes
- No contact corrosion
- Optimum adjustment of the disc to the body seat by means of the movability the guide bushing
- To improve the stress capacity when temperature and pressure changes
- Easy to assemble and disassemble

Version

- Die-forged body
- Disc with inside shaft
- Fastening of the disc at the cover
- Available with flange and buttweld ends

Operating data

- Up to standard class or special class 900

Materials

- A 105
- A 182 F12 Cl.2
- A 182 F22 Cl.3

Other materials available on request.

Flow media

Depending on the choice of materials, the swing check valves can be used for water, steam, gas, oil or other non-aggressive media.

Applications

Chemical industries, power plants, ship building and other.

Flange version

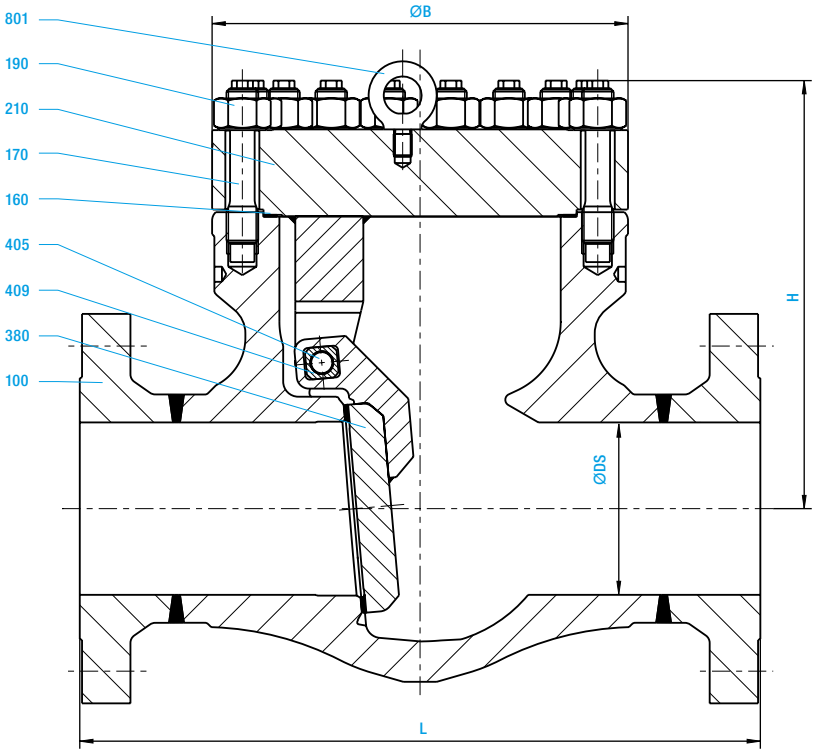

Butt-weld end version

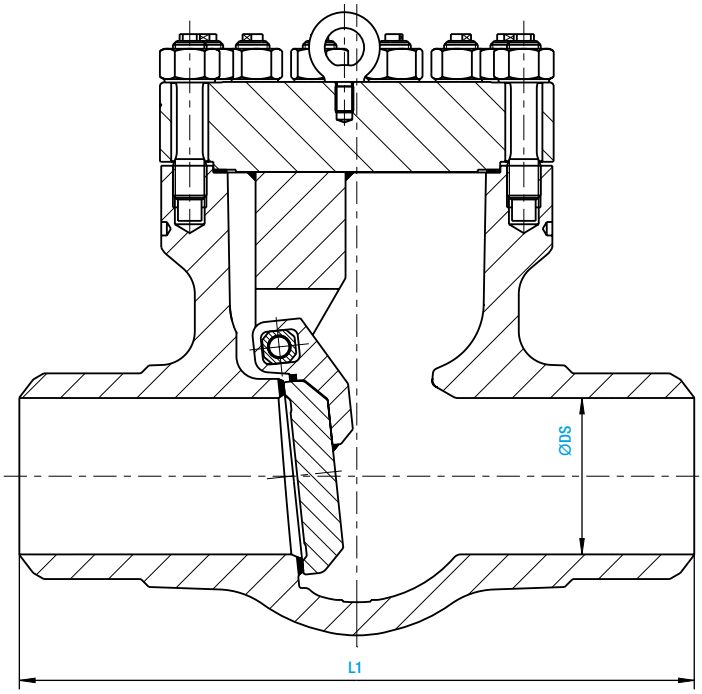

Subject to technical modifications

Materials

Item	Designation	ASTM A105 (B1)	ASTM A182 F12 (D4)	ASTM A182 F22 (D5)
100	Body	ASTM A105	ASTM A182 F12	ASTM A182 F22
	welded on with	Stellite	Stellite	Stellite
160	*Gasket*	*Graphite*	*Graphite*	*Graphite*
170	Stud	ASTM A 193 B7	ASTM A 193 B7	ASTM A 193 B16
190	Hexagonal nut	ASTM A 194 2H	ASTM A 194 2H	ASTM A 194 4
210	Bonnet	ASTM A182 F22	ASTM A182 F22	ASTM A182 F22
380	*Disc*	*ASTM A182 F22*	*ASTM A182 F22*	*ASTM A182 F22*
	welded on with	*Stellite*	*Stellite*	*Stellite*
405	*Hinge pin*	*1.4021*	*1.4021*	*1.4021*
409	*Guide bush*	*5.3106*	*5.3106*	*5.3106*
801	*Lifting eye bolt*	*1.0401*	*1.0401*	*1.0401*

Spare parts

Other materials available on request.

Dimensions (mm), Weights (kg), Cvs value (USG/min) and Kvs value (m^3/h)

Class600/ 900				BW	RF		BW	RF
NPS	**DN**	**ØDS**	**B**	**L**	**L1**	**H**	**kg**	**kg**
2	**50**	47	192	215.9	368.3	220	14	19
2 ½	**65/50**	47	192	254	419.1	220	23	31
3	**80**	74	236	304.8	381	280	27	36
4	**100**	95	265	355.6	457.2	320	40	52
5	**125/100**	95	265	431.8	558.8	320	56	70
6	**150**	139	350	508	609.6	410	84	104
8	**200**	183	440	660.4	736.6	510	151	188
10	**250**	228	550	787.4	838.2	595	231	295

SWING CHECK VALVES

640 AA NPS 12-20 CLASS 600

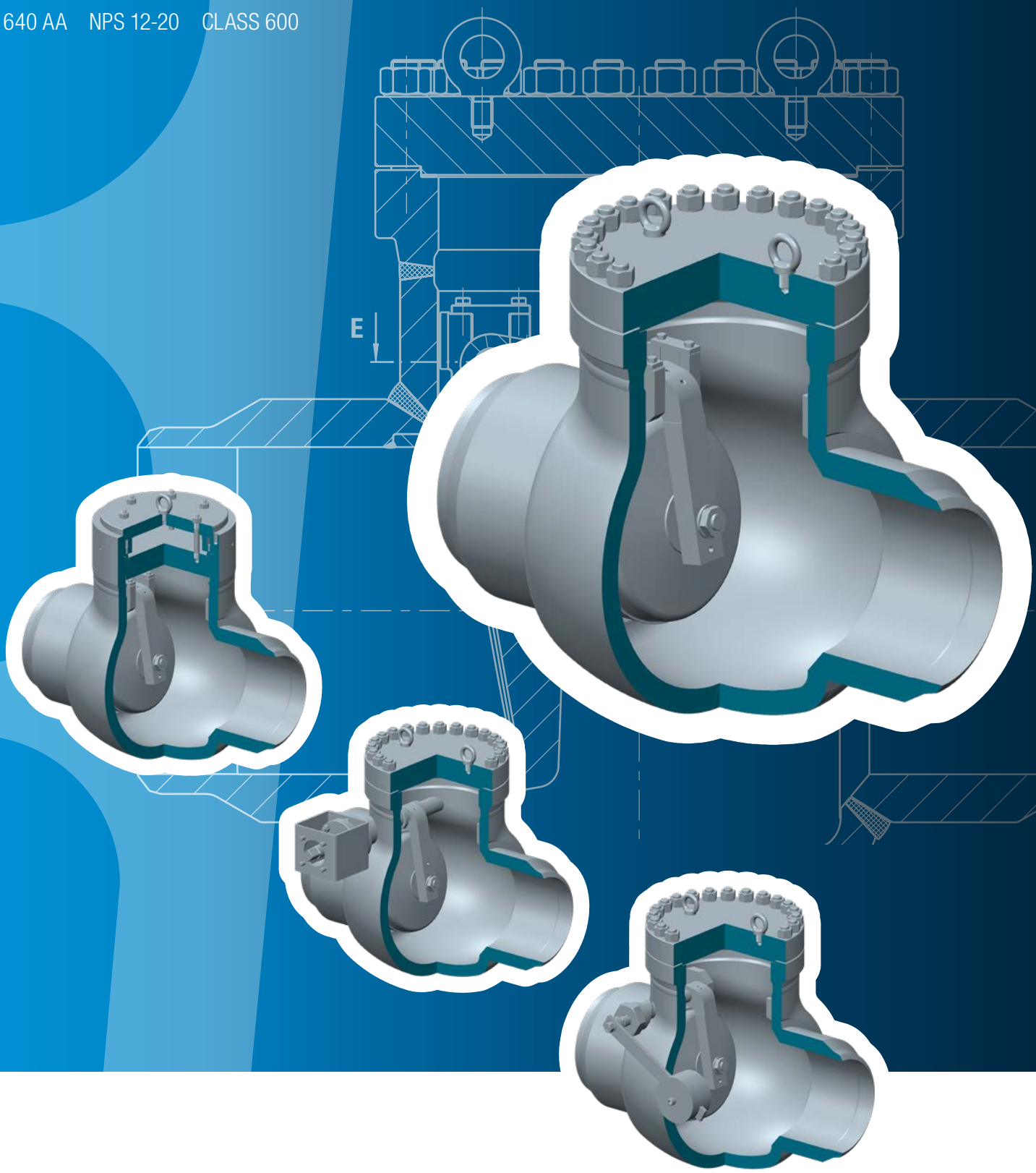

Subject to technical modifications

Design highlights

- Seat armoured with Stellite
- Spherical pin on the swing check disc

Advantages

- Effective impermeability in seat
- Better mobility and adjustment of the disc to the body seat

Version

- Welded steel plate body
- Swing check valve with internal shaft
- Swing check disc attached in the body
- Available with flanged and butt-weld connections

Optional:
- Available with external valve shaft (640 AE)
- With pressure-sealing cover as per VGB guidelines (640 AB)
- Available as freewheel swing check valve with part-turn actuator (640 DJ)

Materials

- A 105
- A 182 F12
- A 182 F22

Other materials available on request.

Flow media

Depending on the choice of materials, the swing check valves can be used for water, steam, gas, oil or other non-aggressive media.

Applications

In chemical, industrial and power plants, and in shipbuilding.

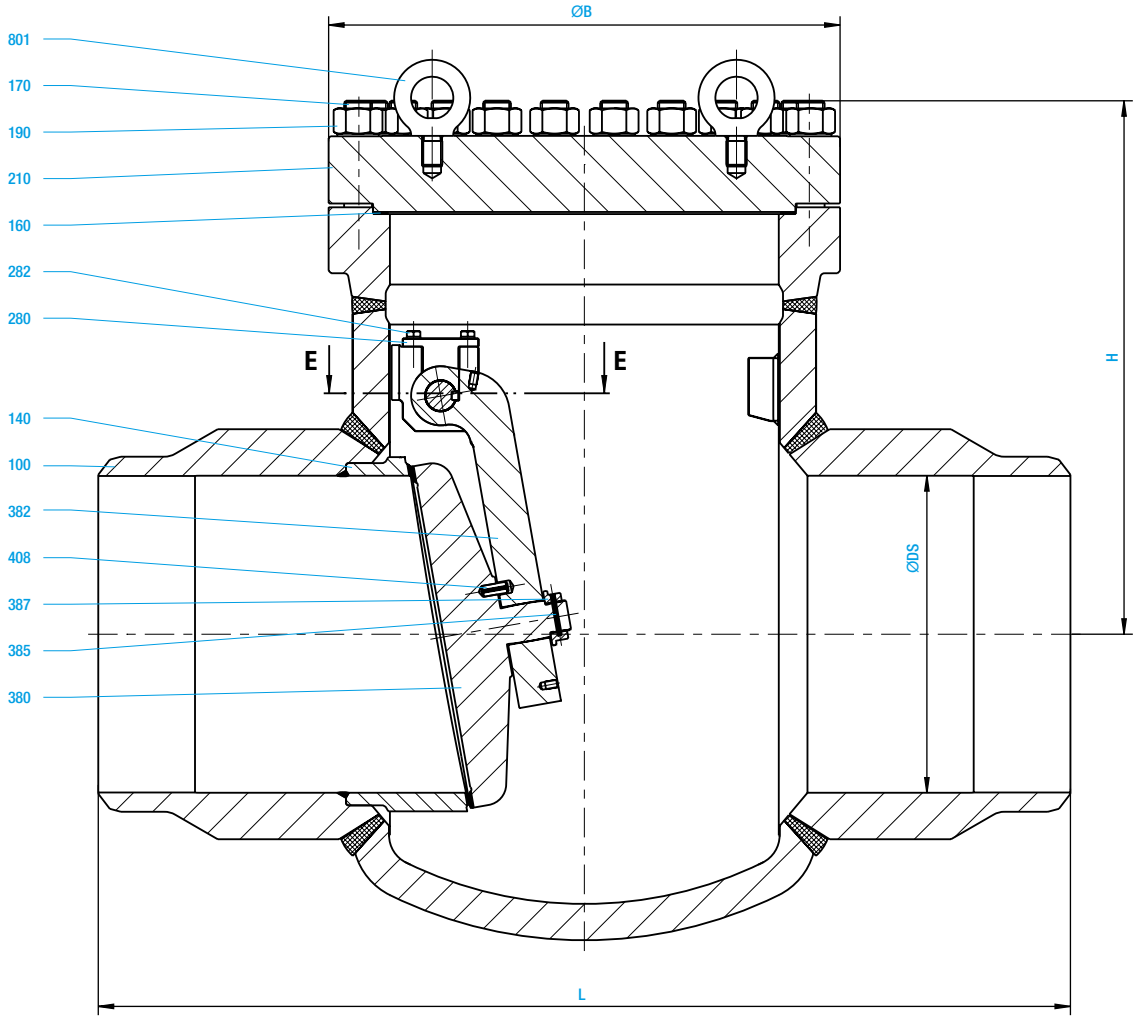

E-E

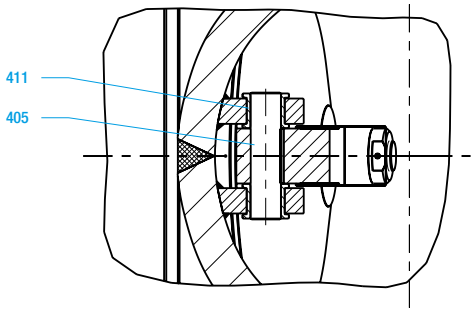

Subject to technical modifications

Materials

Item	Designation	ASTM A105 (B1)	ASTM A182 F12 (D4)	ASTM A182 F22 (D5)
100	Body	ASTM A105	ASTM A182 F12	ASTM A182 F22
140	Seat ring	ASTM A105	ASTM A182 F12	ASTM A182 F22
	Armoured with	Stellite	Stellite	Stellite
160	*Gasket*	*Grooved profile with graphite layer*	*Grooved profile with graphite layer*	*Grooved profile with graphite layer*
170	Stud bolt	ASTM A193 B16	ASTM A193 B16	ASTM A193 B16
190	Hexagonal nut	ASTM A194 4	ASTM A194 4	ASTM A194 4
210	Cover	ASTM A105	ASTM A182 F12	ASTM A182 F22
280	Bracket	ASTM A105	ASTM A182 F12	ASTM A182 F22
282	Hexagonal bolt	stainless steel	stainless steel	stainless steel
380	*Swing check disc*	*ASTM A105*	*ASTM A182 F12*	*ASTM A182 F22*
	Armoured with	*Stellite*	*Stellite*	*Stellite*
382	*Disc lever*	*ASTM A182 F22*	*ASTM A182 F22*	*ASTM A182 F22*
385	Tension pin	1.4310	1.4310	1.4310
387	*Round nut*	*1.4923*	*1.4923*	*1.4923*
405	*Valve shaft*	*1.4122*	*1.4122*	*1.4122*
408	Tension pin	1.4310	1.4310	1.4310
411	Bearing	5.3103	5.3103	5.3103
801	Ring bolt	1.0401	1.0401	1.0401

Spare parts

Other materials available on request.

Dimensions (mm) and Weights (kg)

NPS	DN	ØDS	L	H	ØB	kg
12	**300**	276	900	540	480	585
14	**350**	330	1025	570	530	850
16	**400**	375	1150	632	605	1100
18	**450**	419	1220	683	670	1530
20	**500**	464	1400	738	770	2077

HIGH PRESSURE SWING CHECK VALVES

DRI 26 640 AB NPS 2½-12 CLASS 1500-2500

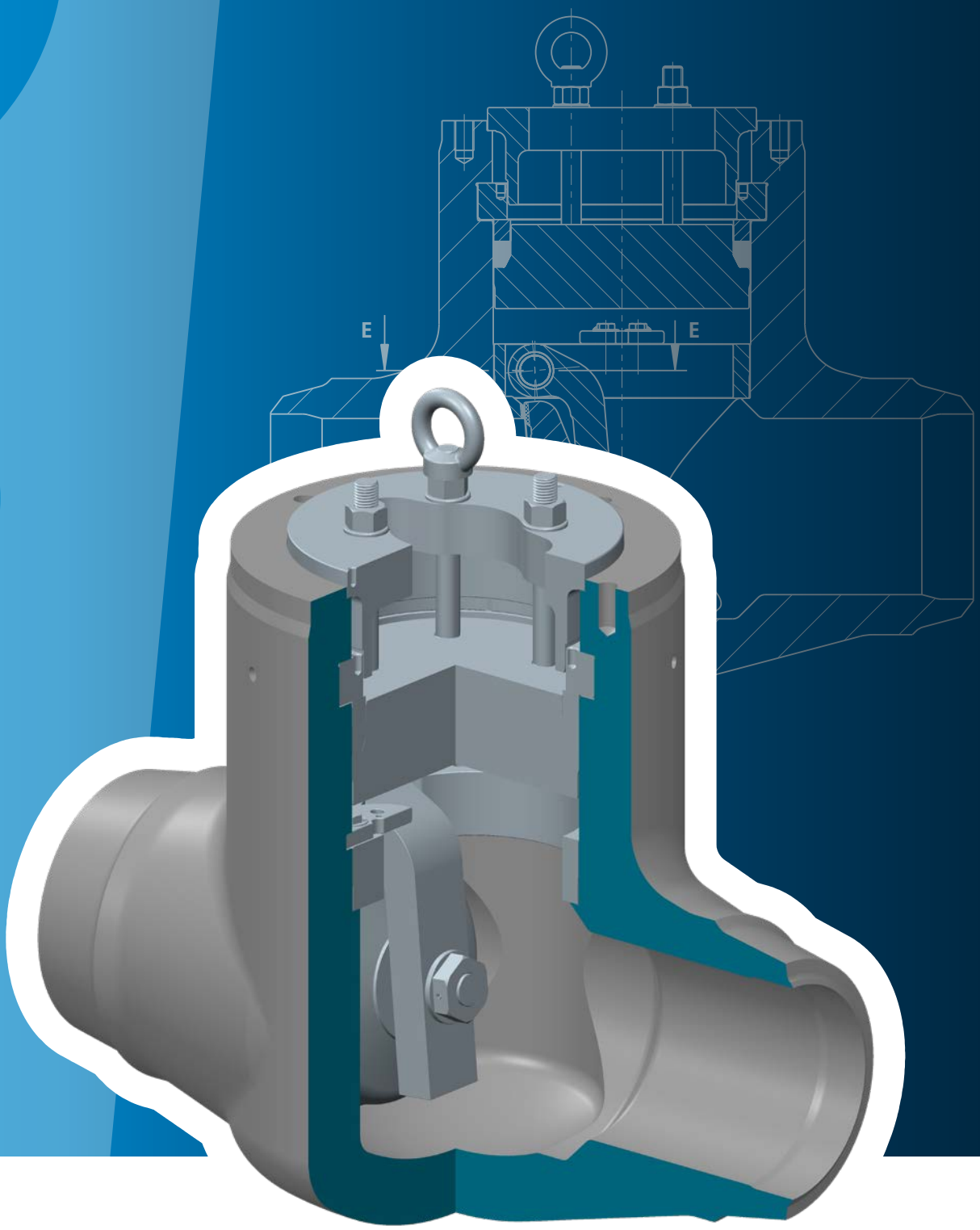

Subject to technical modifications

Design highlights

- Valve body made of forged steel
- Tubular forged body
- Seats faced with stellite
- Lever rests in a separate support ring
- Shut-off disc with curved journal
- Pressure sealing bonnet
- Cover can be used for dismantling of the cover fastener

Advantages

- Free from porosity and shrink holes
- No pressure retaining weldseams
- Extremely resistant to wear
- The setting of the disc can be examined before installing the bonnet cover
- Optimum adjustment of the disc to the body seat
- Best possible sealing function
- No special tools are necessary for dismantling the disc fastener

Version

- Valve body made of forged steel
- Swing check valve with internal hinge pin
- Lever rests in separate support ring
- Pressure sealing bonnet acc. VGB-guidelines

Pressure ratings

- Up to standard class or special class 2500

Materials

- A 105
- A 182 F12 Cl.2
- A 182 F22 Cl.3
- A 182 F91
- A 182 F92

Other materials available on request.

Flow media

Depending on the choice of materials, the swing check valves can be used for water, steam, gas, oil or other non-aggressive media.

Applications

Chemical industries, power plants, ship building and other

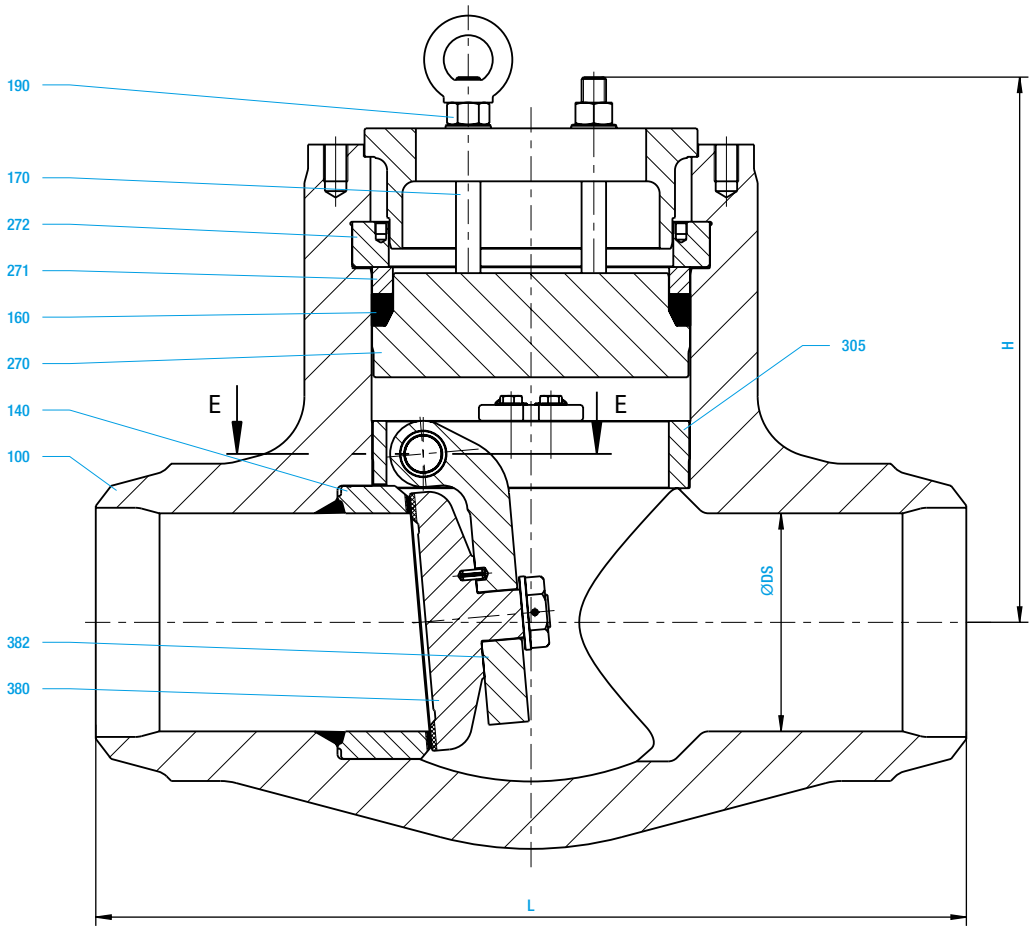

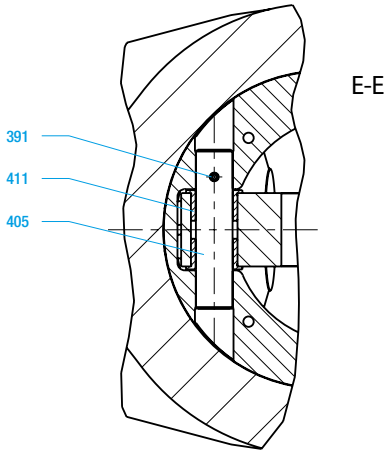

Subject to technical modifications

Materials

Item	Designation	ASTM A105 (B1)	ASTM A182 F12 (D4)	ASTM A182 F22 (D5)	ASTM A182 F91 (F3)	ASTM A182 F92 (F6)
100	Body	ASTM A105	ASTM A182 F12	ASTM A182 F22	ASTM A182 F91	ASTM A182 F92
140	Seat ring	ASTM A105	ASTM A182 F12	ASTM A182 F22	ASTM A182 F91	ASTM A182 F92
	welded on with	Stellite	Stellite	Stellite	Stellite	Stellite
160	*Gasket*	*Graphite*	*Graphite*	*Graphite*	*Graphite*	*Graphite*
170	Stud	A 193 B7	A 193 B7	A 193 B7	A 193 B7	A 193 B7
190	Hexagonal nut	A 194 2H	A 194 2H	A 194 2H	A 194 2H	A 194 2H
270	Cover	ASTM A182 F22	ASTM A182 F22	ASTM A182 F22	ASTM A182 F91	ASTM A182 F92
271	Ring	ASTM A182 F22	ASTM A182 F22	ASTM A182 F22	ASTM A182 F91	ASTM A182 F92
272	Segment ring	ASTM A182 F22	ASTM A182 F22	ASTM A182 F22	ASTM A182 F91	ASTM A182 F92
273	Cover	1.5419	1.5419	1.5419	1.5419	1.5419
305	Supportring	ASTM A182 F22	ASTM A182 F22	ASTM A182 F22	ASTM A182 F91	ASTM A182 F91
331	Hexagonal screw	A4	A4	A4	A4	A4
333	*Flange*	*ASTM A182 F91*	*ASTM A182 F91*	*ASTM A182 F91*	*ASTM A182 F91*	*ASTM A182 F91*
337	*Retaining ring*	*1.4301*	*1.4301*	*1.4301*	*1.4301*	*1.4301*
380	*Disc*	*ASTM A182 F22*	*ASTM A182 F22*	*ASTM A182 F22*	*ASTM A182 F91*	*ASTM A182 F92*
	welded on with	*Stellite*	*Stellite*	*Stellite*	*Stellite*	*Stellite*
382	Hinge	ASTM A182 F22	ASTM A182 F22	ASTM A182 F22	ASTM A182 F91	ASTM A182 F91
383	*Round nut*	*1.4923*	*1.4923*	*1.4923*	*1.4923*	*1.4923*
391	*Tension pin*	*1.4310*	*1.4310*	*1.4310*	*1.4310*	*1.4310*
405	*Hinge pin*	*1.4923*	*1.4923*	*1.4923*	*1.4923*	*1.4923*
411	*Guide bushing*	*0.7660*	*0.7660*	*0.7660*	*0.7660*	*0.7660*

Spare parts

Dimensions (mm)

Class 1500		BW		
NPS	DN	ØDS	L	H
3	**80**	70	305	230
4	**100**	90	406	257
5	**125/100**	111	483	317
6	**150**	136	559	357
8	**200**	178	711	445
10	**250**	222	864	530
12	**300**	269	991	603

Class 2500		BW		
NPS	DN	ØDS	L	H
2 ½	**65**	330.2	508	231
3	**80**	368.3	577.9	230
4	**100**	457.2	673.1	257
5	**125**	533.4	793.8	317
6	**150**	609.6	914.4	357
8	**200**	762	1022.4	445
10	**250**	914.4	1270	530

Weights (kg), Cvs value (USG/min) and Kvs value (m³/h)

Class 1500		BW	Flow Coefficient*	
NPS	DN	kg	Cv	Kvs
3	**80**	49	250	215
4	**100**	83	435	375
5	**125/100**	131	635	550
6	**150**	265	950	820
8	**200**	400	1640	1410
10	**250**	744	2545	2200
12	**300**	1178	3570	3090

Class 2500		BW	Flow Coefficient*	
NPS	DN	kg	Cv	Kvs
2 ½	**65**	59	100	90
3	**80**	91	155	135
4	**100**	151	250	215
5	**125**	289	415	360
6	**150**	447	740	640
8	**200**	799	1100	950
10	**250**	1543	1765	1530

* Deviations are possible due to changed connection dimensions

HIGH PRESSURE SWING CHECK VALVES

DRI 27 640 AB NPS 2½-24 CLASS 900-4500

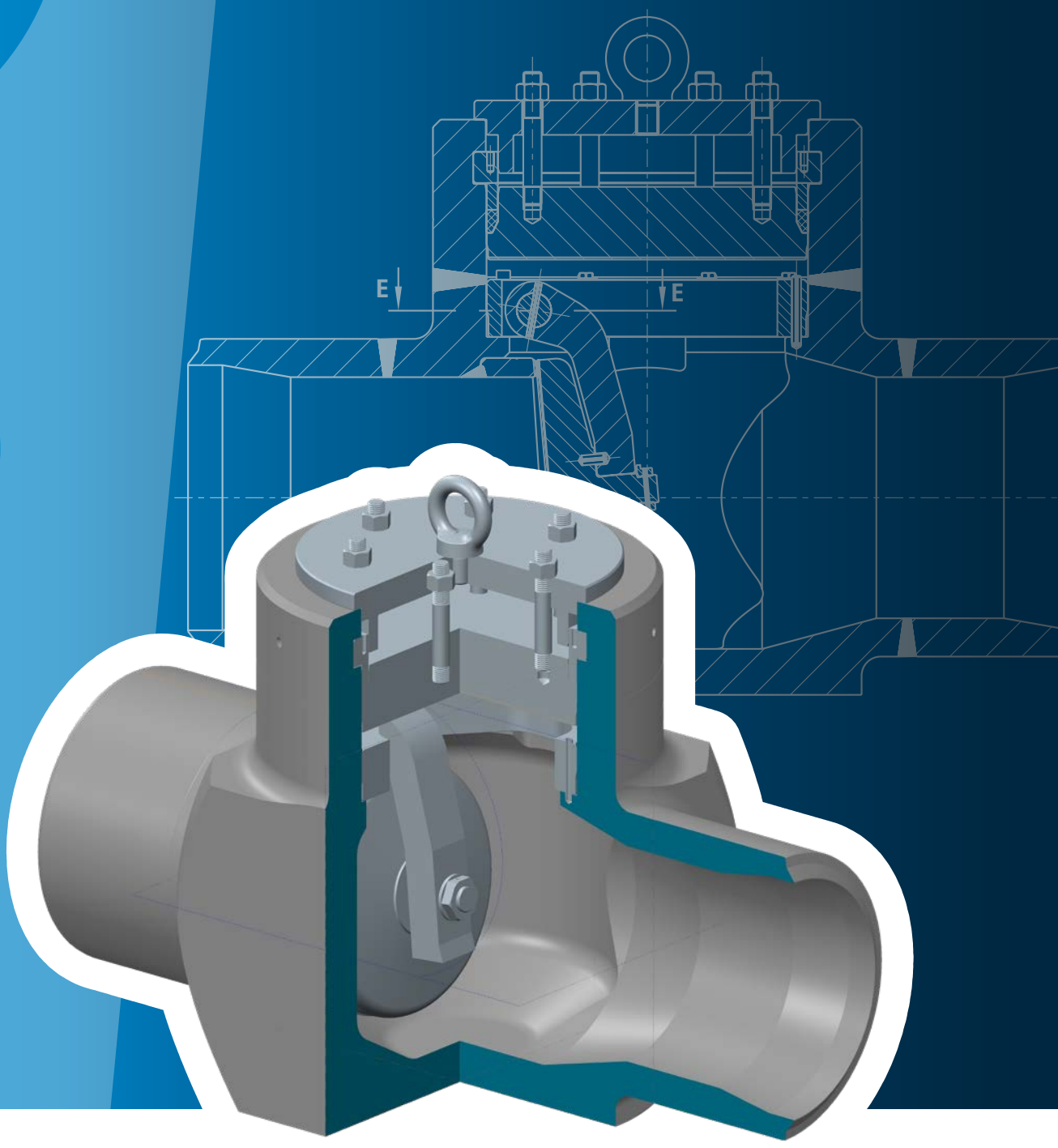

Subject to technical modifications

Design highlights

- Valve body made of forged steel
- Seats faced with stellite
- Lever rests in a separate support ring
- Shut-off device with curved journal
- Pressure sealing bonnet

Advantages

- Free from porosity and shrink holes
- Extremely resistant to wear
- The setting of the disc can be examined before installing the bonnet cover
- Optimum alignment of the disc to the body seat
- Best possible sealing function

Version

- Valve body made of forged steel
- Swing check valve with internal hinge pin
- Lever rests in a separate support ring
- Welded seat ring
- Pressure sealing bonnet acc. VGB-guidelines

Operating data

Up to standard class or special class 4500

Materials

- A 105
- A 182 F12 Cl.2
- A 182 F22 Cl.3
- A 182 F91
- A 182 F92

Other materials available on request.

Flow media

Depending on the choice of materials, the swing check valves can be used for water, steam, gas, oil or other non-aggressive media.

Applications

High temperature steam and water, refining (catalytic reformers and hydrocrackers), petrochemical and chemical industries

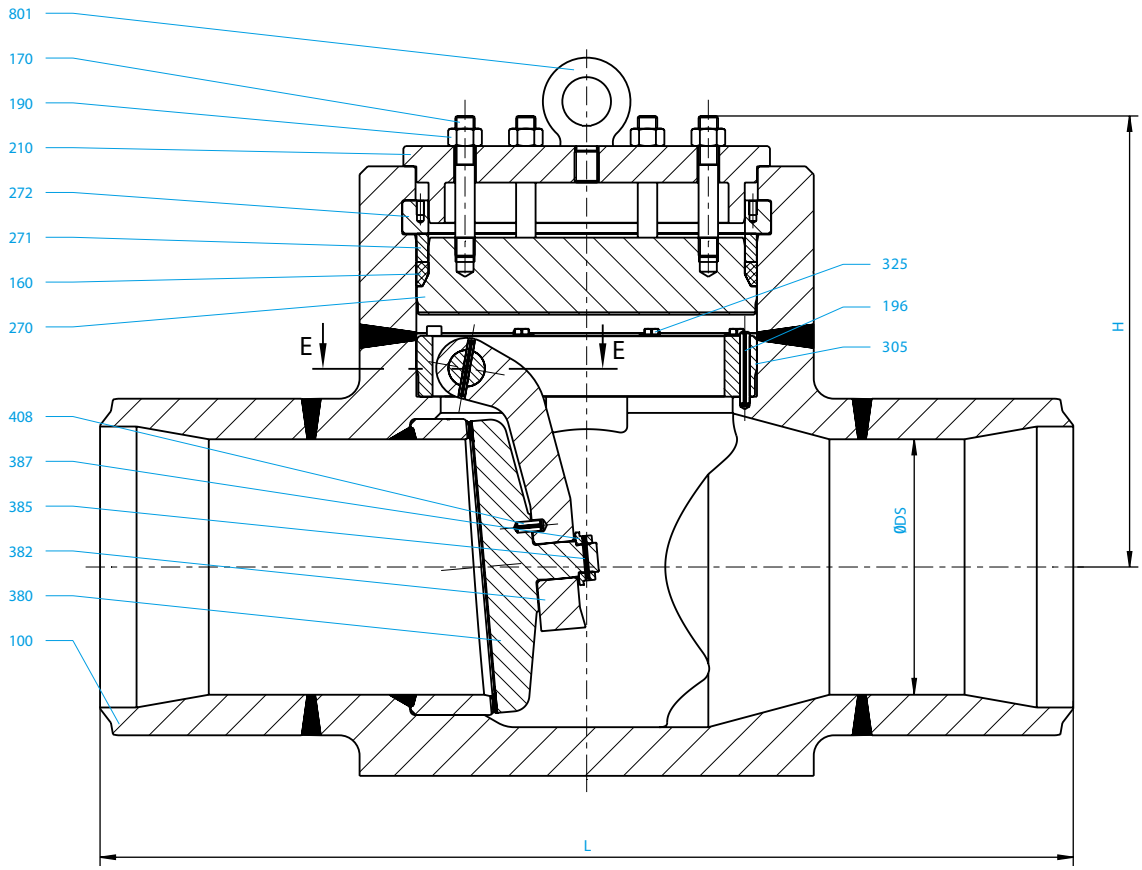

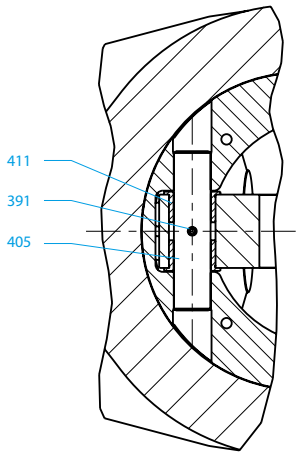

E-E

Subject to technical modifications

Materials

Item	Designation	ASTM A105 (B1)	ASTM A182 F12 (D4)	ASTM A182 F22 (D5)	ASTM A182 F91 (F3)	ASTM A182 F92 (F6)
100	Body	ASTM A105	ASTM A182 F12	ASTM A182 F22	ASTM A182 F91	ASTM A182 F92
160	*Gasket*	*Graphite*	*Graphite*	*Graphite*	*Graphite*	*Graphite*
170	Clamping screw	A 193 B7	A 193 B7	A 193 B7	A 193 B7	A 193 B7
190	Hexagonal nut	A 194 2H	A 194 2H	A 194 2H	A 194 2H	A 194 2H
196	*Tension pin*	*1.4310*	*1.4310*	*1.4310*	*1.4310*	*1.4310*
210	Bonnet	ASTM A182 F22	ASTM A182 F22	ASTM A182 F22	ASTM A182 F22	ASTM A182 F91
270	Cover	ASTM A105	ASTM A182 F12	ASTM A182 F22	ASTM A182 F91	ASTM A182 F92
271	Ring	ASTM A105	ASTM A182 F12	ASTM A182 F22	ASTM A182 F91	ASTM A182 F92
272	Segment ring	ASTM A105	ASTM A182 F12	ASTM A182 F22	ASTM A182 F91	ASTM A182 F92
305	*Supportring*	*ASTM A105*	*ASTM A182 F12*	*ASTM A182 F22*	*ASTM A182 F91*	ASTM A182 F91
325	Headcap screw	A4	A4	A4	A4	A4
380	*Disc*	*ASTM A105*	*ASTM A182 F12*	*ASTM A182 F22*	*ASTM A182 F91*	*ASTM A182 F92*
	welded on with	*Stellite*	*Stellite*	*Stellite*	*Stellite*	*Stellite*
382	*Hinge*	*ASTM A105*	*ASTM A182 F12*	*ASTM A182 F22*	*ASTM A182 F91*	*ASTM A182 F91*
385	*Tension pin*	*1.4310*	*1.4310*	*1.4310*	*1.4310*	*1.4310*
387	*Round nut*	*ASTM A105*	*ASTM A182 F12*	*ASTM A182 F22*	*1.4923*	*1.4923*
391	*Tension pin*	*1.4310*	*1.4310*	*1.4310*	*1.4310*	*1.4310*
405	*Hinge pin*	*1.4923*	*1.4923*	*1.4923*	*1.4923*	*1.4923*
408	*Tension pin*	*1.4310*	*1.4310*	*1.4310*	*1.4310*	*1.4310*
411	*Guide bushing*	*5.3106*	*5.3106*	*5.3106*	*0.7660*	*0.7660*
801	Lifting eye bolt	1.0401	1.0401	1.0401	1.0401	1.0401

Spare parts

Dimensions (mm), Weights (kg), Cvs value (USG/min) and Kvs value (m^3/h)

Class 900			BW		
NPS	**DN**	**ØDS**	**L**	**H**	**kg**
14	**350**	315	1200	540	1400
16	**400**	360	1350	600	1950
18	**450**	405	1500	690	2600

Class 1500			BW		
NPS	**DN**	**ØDS**	**L**	**H**	**kg**
14	**400**	315	1550	580	2300
16	**450**	360	1750	660	3600
18	**500**	405	1950	750	5400

Class 2500 and above on request.

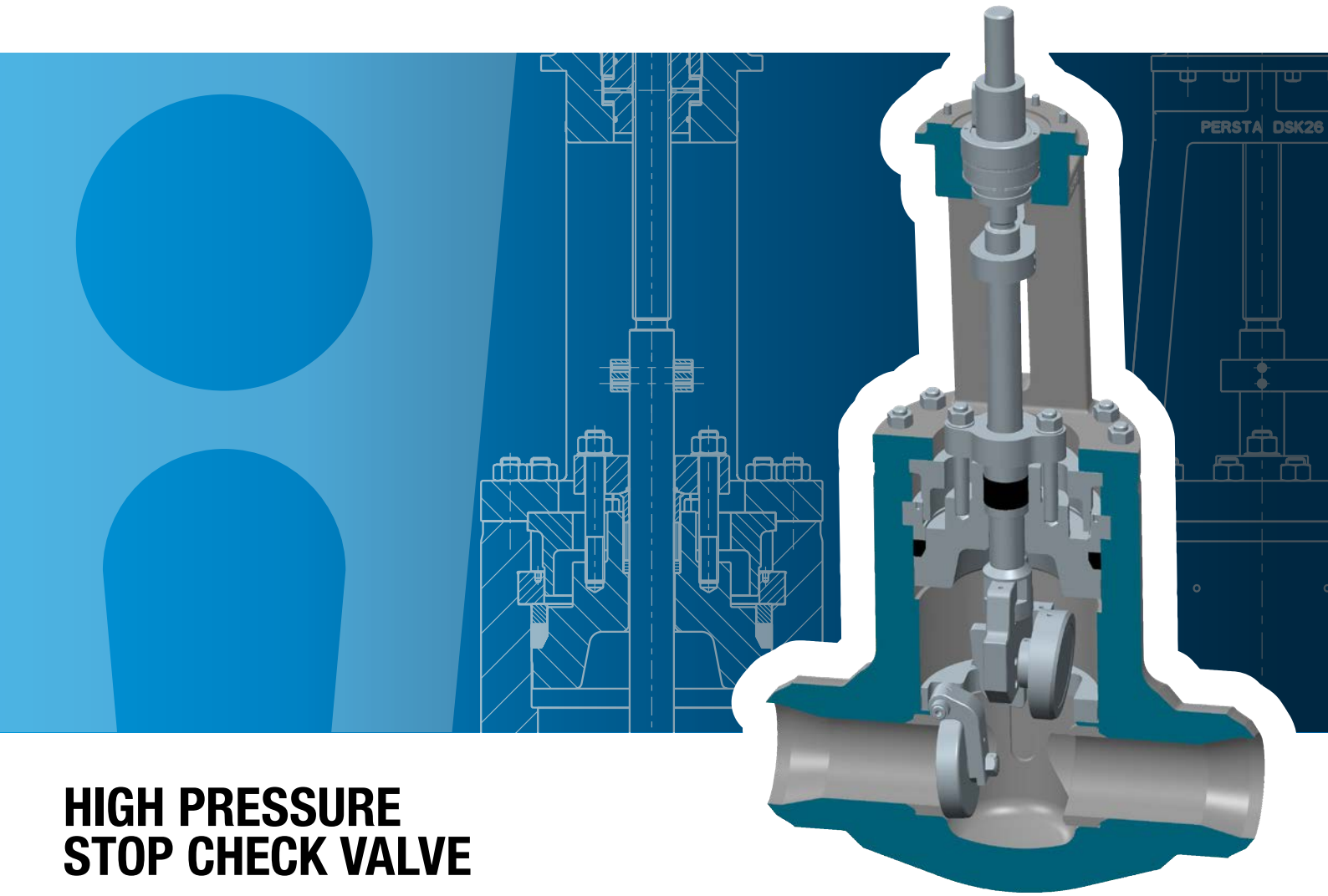

HIGH PRESSURE STOP CHECK VALVE

DRA 26 / 27 640 ST NPS 3-16 CLASS 900-2500

Design highlights

- Operating mode as a check valve and a gate valve
- Sealing in both flow directions
- Full straight seat passage
- Full opening angle of the check disk
- Flexible-mounted non-return and shut-off disc
- Shut-off system guided in a groove
- Shut-off discs with anti-twist safeguard

Advantages

- Possible savings:
  - One valve
  - Two welding seams in pipeline
  - Space and weights
  - Less insulation time and effort
  - Less maintenance and inspection equirements
- Secure protection of relevant and complex parts of the plant
- Better flow characteristics than non-return valves
- Minimizing pressure drop
- Better smoothness of running and adjustment of the valves in the body seats
- Prevention of positional deviations of the shut-off disc and protection against damage
- Effective adjustment to the body seats with constant repetitive contact

Version

- Body hollow-forged in a closed die (DRA 26) or made of forged steel (DRA 27)
- Double-sided high-pressure shut-off system
  - Function of a check valve
  - Function of a gate valve
- Internal hinge pin, pivoted in a separate retaining ring
- Movable shut-off system guided in a groove
- Defined stop of the check disc
- Pressure sealing bonnet acc. to VGB-guidelines
- Generally stellited seats

Pressure ratings

- Up to standard class or special class 2500

Materials

- A 105
- A 182 F12 Cl.2
- A 182 F22 Cl.3
- A 182 F91
- A 182 F92

Other materials and nominal diameters available on request.

Flow media

Depending on the choice of materials, the high pressure stop check valve can be used for water, steam, gas, oil or other non-aggressive media.

Applications

High temperature steam and water, refining (catalytic reformers and hydrocrackers), petrochemical and chemical industries

High pressure stop check valve

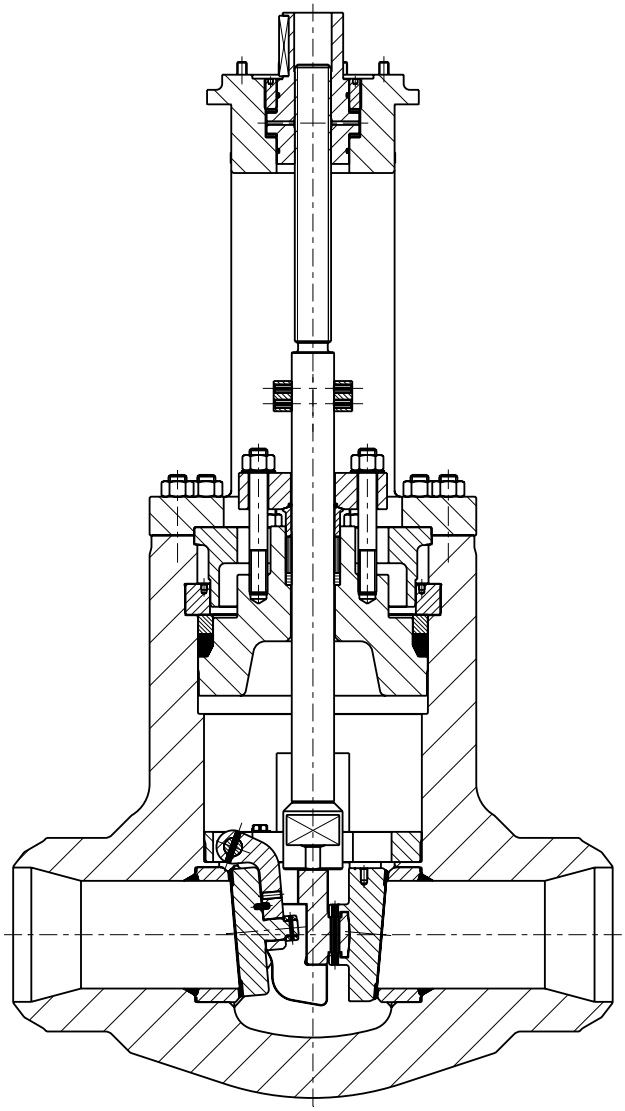

HIGH PRESSURE LINE BLIND VALVES

DPV 10-27 990 VW NPS 2½-28 CLASS 900-4500

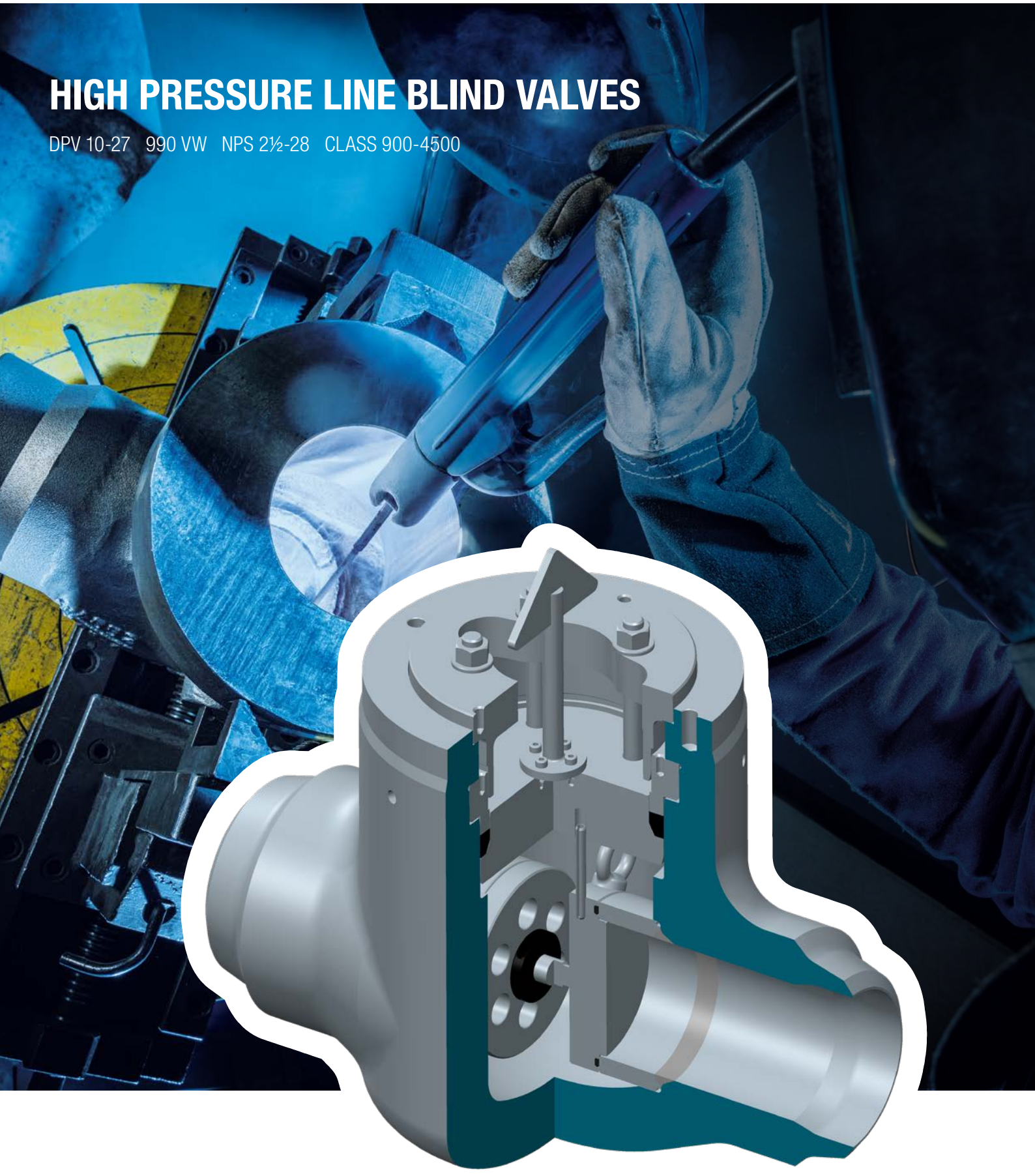

Subject to technical modifications

Design highlights

- Valve body and cover made of forged steel
- Position indicator
- Pressure sealing bonnet
- Cover can be used for dismantling of the cover fastener

Advantages

- Free from porosity and shrink holes
- Indicates if seal plate is mounted or dismantled
- Best possible sealing function
- No special tools are necessary for dismantling

Version

- Valve body made of forged steel with welded seat rings
- Position indicator
- Pressure sealing bonnet acc. to VGB-guidelines

Operating data

- Up to standard class or special class 4500

Materials

- A 105
- A 182 F12 Cl.2
- A 182 F22 Cl.3
- A 182 F91
- A 182 F92

Other materials available on request.

Flow media

Depending on the choice of materials, the high pressure line blind valves can be used for water, steam, gas, oil or other non-aggressive media.

Applications

High temperature steam and water, refining (catalytic reformers and hydrocrackers), petrochemical and chemical industries.

High pressure line blind valve with insert

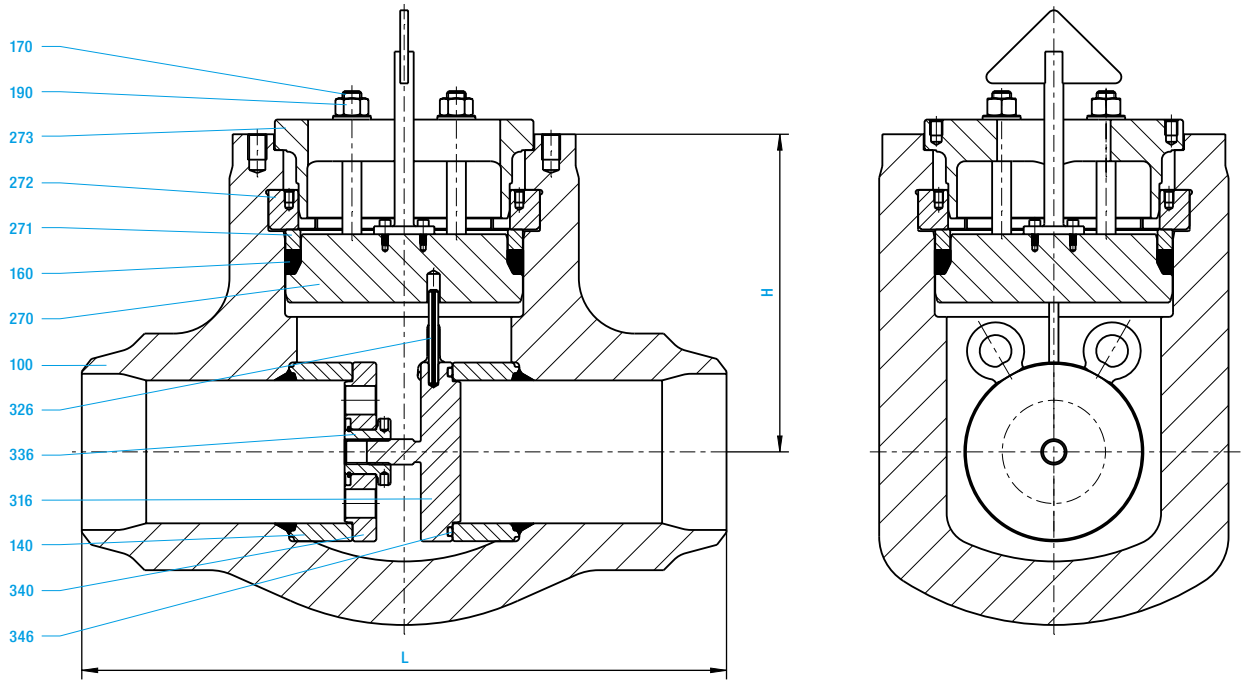

High pressure line blind valve without insert

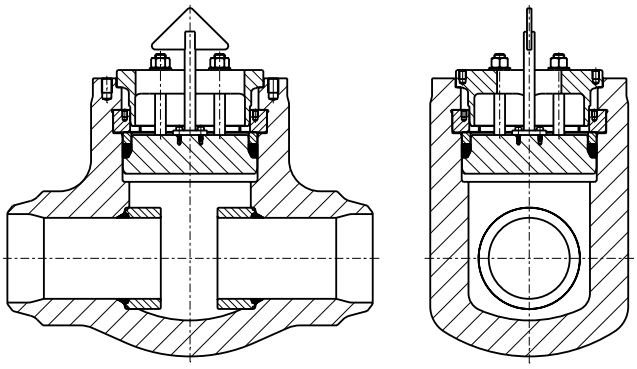

High pressure line blind valve with blow-out insert

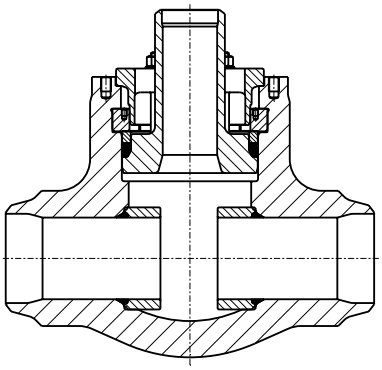

Special design with blow-out insert or guide tube available on request

Subject to technical modifications

Materials

Item	Designation	ASTM A105 (B1)	ASTM A516 Gr 60 (B2)	ASTM A182 F12 (D4)	ASTM A182 F22 (D5)	ASTM A182 F91 (F3)
100	Body	ASTM A516 Gr 60	ASTM A516 Gr 60	ASTM A182 F12	ASTM A182 F22	ASTM A182 F91
140	Seat ring	ASTM A105	ASTM A105	ASTM A182 F12	ASTM A182 F22	ASTM A182 F91
	welded on with	Stellite	Stellite	Stellite	Stellite	Stellite
160	*Gasket*	*Graphite*	*Graphite*	*Graphite*	*Graphite*	*Graphite*
170	Tension screw	A 193 B7	A 193 B7	A 193 B7	A 193 B7	A 193 B7
190	Hexagonal nut	A 194 2H	A 194 2H	A 194 2H	A 194 2H	A 194 2H
270	Cover	ASTM A182 F22	ASTM A182 F22	ASTM A182 F22	ASTM A182 F22	ASTM A182 F91
271	Ring	ASTM A182 F22	ASTM A182 F22	ASTM A182 F22	ASTM A182 F22	ASTM A182 F91
272	Segment ring	ASTM A182 F22	ASTM A182 F22	ASTM A182 F22	ASTM A182 F22	ASTM A182 F91
273	Cover	ASTM A105	ASTM A105	ASTM A105	ASTM A105	ASTM A105
316	Cone plate	ASTM A182 F22	ASTM A182 F22	ASTM A182 F22	ASTM A182 F22	ASTM A182 F91
326	Tension pin	1.4021	1.4021	1.4021	1.4021	1.4021
336	Yoke sleeve	CW 713 R	CW 713 R	CW 713 R	CW 713 R	CW 713 R
337	Retaining ring	Spring steel	Spring steel	Spring steel	Spring steel	Spring steel
340	Plate	ASTM A182 F22	ASTM A182 F22	ASTM A182 F22	ASTM A182 F22	ASTM A182 F22
344	Threaded bolt	1.4021	1.4021	1.4021	1.4021	1.4021
346	*O-ring*	*Viton*	*Viton*	*Viton*	*Viton*	*Viton*

Spare parts

Dimensions (mm), Weights (kg), Cvs value (USG/min) and Kvs value (m^3/h)

Class 1500		BW			
NPS	**DN**	**ØDS**	**L**	**H**	**kg**
3	**80**	70	305	207	49
4	**100**	90	406	231	83
5	**125**	111	483	285	137
6	**150**	136	559	321	265
8	**200**	178	711	401	401
10	**250**	222	864	477	744
12	**300**	263	991	543	1182

Class 2500		BW			
NPS	**DN**	**ØDS**	**L**	**H**	**kg**
2 ½	**65**	50	330	231	69
3	**80**	57	368	246	91
4	**100**	72	457	278	150
5	**125**	90	580	337	288
6	**150**	111	925	431	445
8	**200**	146	762	479	796
10	**250**	185	1270	587	1542

Larger Sizes and intermediate ratings in request

A105 / A350 LF2 [1)]

	Standard Class										Special Class									
	Working pressures by Class, bar										Working pressures by Class, bar									
Temp. ° C	150	300	600	725	900	1500	1850	2500	3200	4500	150	300	600	725	900	1500	1850	2500	3200	4500
38	19.6	51.0	102.0	123.3	153.1	255.1	314.6	425.1	544.2	765.3	19.8	51.7	103.4	124.9	155.1	258.6	318.9	430.9	551.6	775.7
50	19.1	49.8	99.6	120.3	149.3	248.9	307.0	414.9	531.0	746.7	19.8	51.7	103.4	124.9	155.1	258.6	318.9	430.9	551.6	775.7
100	17.7	46.7	93.4	112.9	140.1	233.5	288.0	389.1	498.1	700.5	19.8	51.6	103.3	124.8	154.9	258.2	318.5	430.4	550.9	774.6
150	15.8	45.1	90.1	108.9	135.2	225.3	277.8	375.4	480.5	675.8	19.6	51.0	102.0	123.3	153.0	255.0	314.5	425.0	544.0	765.0
200	13.8	43.8	87.6	105.9	131.5	219.1	270.2	365.1	467.4	657.3	19.4	50.6	101.1	122.2	151.7	252.9	311.9	421.4	539.4	758.6
250	12.1	42.0	83.9	101.4	125.9	209.8	258.8	349.7	447.6	629.5	19.4	50.6	101.1	122.2	151.7	252.9	311.9	421.4	539.4	758.6
300	10.2	39.9	79.8	96.4	119.7	199.5	246.1	332.6	425.7	598.6	19.4	50.6	101.1	122.2	151.7	252.9	311.9	421.4	539.4	758.6
325	9.3	38.7	77.3	93.4	116.0	193.4	238.5	322.3	412.5	580.1	19.3	50.4	100.7	121.7	151.1	251.8	310.5	419.6	474.8	577.4
350	8.4	37.6	75.3	91.0	112.9	188.2	232.1	313.7	401.6	564.7	18.8	49.0	98.0	118.5	147.1	245.1	302.3	408.5	522.9	735.3
375	7.4	36.4	72.8	88.0	109.2	182.1	224.6	303.4	388.4	546.2	18.2	47.4	94.8	114.6	142.2	237.1	292.4	395.1	505.7	711.2
400	6.5	34.6	69.3	83.7	103.9	173.1	213.5	288.6	369.4	519.4	16.6	43.3	86.6	104.6	129.9	216.4	266.9	360.7	461.7	649.3
425	5.5	28.7	57.5	69.5	86.2	143.7	177.2	239.4	306.5	431.0	13.8	35.9	71.8	86.8	107.7	179.6	221.5	299.3	383.1	538.7
427	5.4	28.2	56.6	68.3	84.8	141.4	174.4	235.6	301.6	424.1	13.6	35.3	70.6	85.4	106.0	176.7	217.9	294.5	377.0	530.1
450	4.6	23.0	45.9	55.5	68.9	114.9	141.7	191.4	245.0	344.6	11.0	28.7	57.4	69.4	86.1	143.6	177.1	239.3	306.3	430.7
475	3.7	17.5	35.0	42.3	52.5	87.4	107.8	145.7	186.5	262.3	8.4	21.9	43.7	52.8	65.6	109.3	134.8	182.1	233.1	327.9
500	2.8	11.5	23.0	27.8	34.6	57.6	71.0	96.0	122.9	172.8	5.5	14.4	28.8	34.8	43.2	72.0	88.8	120.0	153.6	216.0
538	1.4	5.8	11.6	14.0	17.4	29.0	35.8	48.4	61.9	87.1	2.8	7.3	14.5	17.5	21.8	36.3	44.8	60.5	77.4	108.8

Notes: [1)] Upon prolonged exposure to temperatures above 427 °C, the carbide phase of steel may be converted to graphite. Permissible, but not recommended for prolonged useage above 427 °C.

A516 Gr. 60 [1)]

	Standard Class										Special Class									
	Working pressures by Class, bar										Working pressures by Class, bar									
Temp. ° C	150	300	600	725	900	1500	1850	2500	3200	4500	150	300	600	725	900	1500	1850	2500	3200	4500
38	16.3	42.6	85.2	102.9	127.7	212.9	262.6	354.9	454.2	638.7	17.0	44.4	88.7	107.2	133.1	221.8	273.5	369.6	473.1	665.4
50	15.9	41.6	83.2	100.5	124.8	208.0	256.5	346.6	443.7	623.9	17.0	44.4	88.7	107.2	133.1	221.8	273.5	369.6	473.1	665.4
100	14.9	38.9	77.8	94.0	116.6	194.4	239.8	324.0	414.7	583.2	17.0	44.4	88.7	107.2	133.1	221.8	273.5	369.6	473.1	665.4
150	14.4	37.6	75.3	91.0	112.9	188.2	232.1	313.7	401.6	564.7	17.0	44.4	88.7	107.2	133.1	221.8	273.5	369.6	473.1	665.4
200	13.8	36.4	72.8	88.0	109.2	182.1	224.6	303.4	388.4	546.2	17.0	44.4	88.7	107.2	133.1	221.8	273.5	369.6	473.1	665.4
250	12.1	35.0	69.9	84.5	104.9	174.9	215.7	291.4	373.0	524.6	17.0	44.4	88.7	107.2	133.1	221.8	273.5	369.6	473.1	665.4
300	10.2	33.1	66.2	80.0	99.4	165.6	204.2	276.0	353.3	496.8	16.5	43.1	86.3	104.3	129.4	215.6	265.9	359.4	460.0	646.9
325	9.3	32.3	64.6	78.1	96.9	161.5	199.2	269.1	344.5	484.5	16.1	42.1	84.1	101.6	126.2	210.3	259.3	350.4	448.5	630.8
350	8.4	31.3	62.5	75.5	93.8	156.3	192.8	260.6	333.5	469.0	15.6	40.7	81.4	98.4	122.1	203.6	251.1	339.3	434.3	610.7
375	7.4	30.4	60.9	73.6	91.3	152.2	187.7	253.7	324.8	456.7	15.2	39.6	79.3	95.8	118.9	198.2	244.5	330.4	422.9	594.6
400	6.5	29.4	58.8	71.1	88.3	147.1	181.4	245.1	313.8	441.3	14.6	38.1	76.2	92.1	114.3	190.5	235.0	317.5	406.4	571.5
425	5.5	25.8	51.6	62.4	77.5	129.1	159.2	215.1	275.4	387.3	12.4	32.3	64.5	78.0	96.8	161.4	199.0	268.9	344.2	484.1
427	5.4	25.5	50.9	61.5	76.5	127.4	157.1	212.2	271.7	382.1	12.2	31.9	63.6	76.9	95.5	159.2	196.3	265.3	339.6	477.6
450	4.6	21.5	42.9	51.9	64.4	107.3	132.4	178.9	229.0	321.9	10.3	26.8	53.7	64.9	80.5	134.1	165.4	223.6	286.2	402.4
475	3.7	13.4	26.9	32.5	40.3	67.2	82.9	112.0	143.4	201.6	6.4	16.8	33.6	40.6	50.4	84.0	103.6	140.0	179.2	252.0
500	2.8	10.3	20.6	24.9	31.0	51.6	63.6	86.0	110.1	154.8	4.9	12.9	25.8	31.2	38.7	64.5	79.6	107.5	137.6	193.5
538	1.4	5.9	11.7	14.2	17.6	29.3	36.2	48.9	62.6	88.0	2.8	7.3	14.7	17.7	22.0	36.7	45.2	61.1	78.2	110.0

Notes: [1)] Upon prolonged exposure to temperatures above 427 °C, the carbide phase of steel may be converted to graphite. Permissible, but not recommended for prolonged useage above 427 °C.

A182 F1 [2)]

	Standard Class										Special Class									
	Working pressures by Class, bar										Working pressures by Class, bar									
Temp. ° C	150	300	600	725	900	1500	1850	2500	3200	4500	150	300	600	725	900	1500	1850	2500	3200	4500
38	18.4	48.0	96.0	116.0	144.0	240.0	296.0	400.0	512.0	720.0	18.4	48.0	96.0	116.0	144.0	240.0	296.0	400.0	512.0	720.0
50	18.4	48.0	96.0	116.0	144.0	240.0	296.0	400.0	512.0	720.0	18.4	48.0	96.0	116.0	144.0	240.0	296.0	400.0	512.0	720.0
100	17.7	48.0	96.0	116.0	144.0	240.0	296.0	400.0	512.0	720.0	18.4	48.0	96.0	116.0	144.0	240.0	296.0	400.0	512.0	720.0
150	15.8	47.3	94.6	114.3	141.9	236.6	291.8	394.3	504.7	709.7	18.4	48.0	96.0	116.0	144.0	240.0	296.0	400.0	512.0	720.0
200	13.8	45.9	91.7	110.8	137.6	229.4	282.9	382.3	489.3	688.1	18.4	48.0	96.0	116.0	144.0	240.0	296.0	400.0	512.0	720.0
250	12.1	44.4	88.9	107.4	133.3	222.2	274.0	370.3	474.0	666.5	18.4	48.0	96.0	116.0	144.0	240.0	296.0	400.0	512.0	720.0
300	10.2	43.2	86.4	104.4	129.6	216.0	266.4	360.0	460.8	648.0	18.4	48.0	96.0	116.0	144.0	240.0	296.0	400.0	512.0	720.0
325	9.3	42.6	85.2	102.9	127.7	212.9	262.6	354.9	454.2	638.7	18.4	48.0	96.0	116.0	144.0	240.0	296.0	400.0	512.0	720.0
350	8.4	41.9	83.6	101.1	125.5	209.1	258.0	348.7	446.2	627.4	18.4	48.0	96.0	116.0	144.0	240.0	296.0	400.0	512.0	720.0
375	7.4	40.5	80.7	97.6	121.2	201.9	248.9	336.1	430.3	605.1	18.4	48.0	96.0	116.0	144.0	240.0	296.0	400.0	512.0	720.0
400	6.5	38.0	76.2	92.0	114.2	190.4	234.7	317.1	405.8	570.4	18.4	48.0	96.0	116.0	144.0	240.0	296.0	400.0	512.0	720.0
425	5.5	36.8	73.2	88.5	109.8	183.0	225.6	304.7	390.0	548.3	18.4	48.0	96.0	116.0	144.0	240.0	296.0	400.0	512.0	720.0
450	4.6	35.4	71.1	85.9	106.5	177.5	218.9	295.9	378.7	532.4	18.1	48.0	96.0	116.0	144.0	240.0	296.0	400.0	512.0	720.0
475	3.7	34.4	68.8	83.1	103.2	171.6	211.7	286.3	366.4	515.2	16.4	45.0	90.0	108.8	135.0	225.0	277.5	375.0	480.0	675.0
500	2.8	23.3	46.7	56.4	70.0	116.7	144.0	194.6	249.1	350.2	11.2	29.2	58.4	70.6	87.6	145.9	180.0	243.2	311.3	437.8
538	1.4	11.2	22.4	27.0	33.5	55.9	69.0	93.2	119.3	167.7	5.4	14.0	27.9	33.7	41.9	69.9	86.2	116.5	149.1	209.6

Notes: [2)] Upon prolonged exposure to temperatures above 468 °C, the carbide phase of steel may be converted to graphite. Permissible, but not recommended for prolonged useage above 468 °C.

Subject to technical modifications

A182 F12 Cl. 2 [1)]

	Standard Class										Special Class									
	Working pressures by Class, bar										Working pressures by Class, bar									
Temp. ° C	150	300	600	725	900	1500	1850	2500	3200	4500	150	300	600	725	900	1500	1850	2500	3200	4500
38	19.8	51.7	103.4	124.9	155.1	258.6	318.9	430.9	551.6	775.7	19.8	51.7	103.4	124.9	155.1	258.6	318.9	430.9	551.6	775.7
50	19.5	51.6	103.1	124.6	154.7	257.8	317.9	429.6	549.9	773.3	19.8	51.6	103.1	124.6	154.7	257.8	317.9	429.6	549.9	773.3
100	17.7	50.6	101.1	122.2	151.7	252.9	311.9	421.4	539.4	758.6	19.4	50.6	101.1	122.2	151.7	252.9	311.9	421.4	539.4	758.6
150	15.8	48.1	96.3	116.3	144.4	240.7	296.8	401.1	513.5	722.1	19.1	49.7	99.4	120.1	149.1	248.6	306.6	414.3	530.3	745.7
200	13.8	46.3	92.6	111.9	138.9	231.4	285.4	385.7	493.7	694.3	19.1	49.7	99.4	120.1	149.1	248.6	306.6	414.3	530.3	745.7
250	12.1	44.8	89.7	108.4	134.5	224.2	276.5	373.7	478.4	672.7	19.0	49.6	99.2	119.9	148.8	248.0	305.9	413.4	529.1	744.1
300	10.2	43.6	87.2	105.4	130.8	218.1	269.0	363.4	465.2	654.2	18.9	49.2	98.4	118.9	147.5	245.9	303.3	409.8	524.6	737.7
325	9.3	43.0	86.0	103.9	129.0	215.0	265.2	358.3	458.6	644.9	18.6	48.6	97.3	117.6	145.9	243.2	300.0	405.4	518.9	729.6
350	8.4	41.9	83.6	101.1	125.5	209.1	258.0	348.7	446.2	627.4	18.4	47.9	95.8	115.8	143.7	239.5	295.4	399.1	510.9	718.4
375	7.4	40.5	80.7	97.6	121.2	201.9	248.9	336.1	430.3	605.1	18.4	47.9	95.8	115.8	143.7	239.5	295.4	399.1	510.9	718.4
400	6.5	38.0	76.2	92.0	114.2	190.4	234.7	317.1	405.8	570.4	18.4	47.9	95.8	115.8	143.7	239.5	295.4	399.1	510.9	718.4
425	5.5	36.8	73.2	88.5	109.8	183.0	225.6	304.7	390.0	548.3	18.4	47.9	95.8	115.8	143.7	239.5	295.4	399.1	510.9	718.4
450	4.6	35.0	69.9	84.5	104.9	174.9	215.7	291.4	373.0	524.6	16.8	43.7	87.4	105.6	131.1	218.6	269.6	364.3	466.3	655.7
475	3.7	27.8	55.6	67.2	83.4	139.0	171.4	231.7	296.6	417.1	13.3	34.8	69.5	84.0	104.3	173.8	214.3	289.6	370.7	521.4
500	2.8	21.2	42.4	51.2	63.6	105.9	130.6	176.6	226.0	317.8	10.2	26.5	53.0	64.0	79.5	132.4	163.3	220.7	282.5	397.3
538	1.4	13.8	27.6	33.4	41.5	69.1	85.2	115.2	147.4	207.3	6.6	17.3	34.6	41.8	51.8	86.4	106.6	144.0	184.3	259.2
550	1.4	11.9	23.8	28.8	35.7	59.5	73.4	99.1	126.9	178.5	5.7	14.9	29.7	35.9	44.6	74.4	91.7	123.9	158.6	223.1
575	1.4	8.8	17.7	21.4	26.5	44.2	54.5	73.7	94.4	132.7	4.2	11.1	22.1	26.7	33.2	55.3	68.2	92.1	117.9	165.9
593	1.4	6.7	13.5	16.3	20.2	33.8	41.6	56.2	72.0	101.2	3.2	8.4	16.8	20.4	25.3	42.2	52.0	70.3	90.0	126.5
600	1.4	5.9	11.9	14.4	17.8	29.7	36.6	49.4	63.3	89.0	2.8	7.4	14.8	17.9	22.2	37.1	45.7	61.8	79.1	111.2
625	1.4	3.9	7.9	9.5	11.8	19.7	24.3	32.9	42.1	59.1	1.9	4.9	9.9	11.9	14.8	24.6	30.4	41.1	52.6	73.9
649	0.9	2.4	4.7	5.7	7.1	11.8	14.5	19.6	25.1	35.3	1.1	2.9	5.9	7.1	8.8	14.7	18.1	24.5	31.4	44.2

Notes: [1)] Permissible, but not recommended for prolonged use above 593 °C.

A182 F22 Cl. 3 [1)]

	Standard Class										Special Class									
	Working pressures by Class, bar										Working pressures by Class, bar									
Temp. ° C	150	300	600	725	900	1500	1850	2500	3200	4500	150	300	600	725	900	1500	1850	2500	3200	4500
38	19.8	51.7	103.4	124.9	155.1	258.6	318.9	430.9	551.6	775.7	19.8	51.7	103.4	124.9	155.1	258.6	318.9	430.9	551.6	775.7
50	19.5	51.7	103.4	124.9	155.1	258.6	318.9	430.9	551.6	775.7	19.8	51.7	103.4	124.9	155.1	258.6	318.9	430.9	551.6	775.7
100	17.7	51.5	103.0	124.5	154.6	257.6	317.7	429.4	549.7	773.0	19.8	51.6	103.3	124.8	154.9	258.2	318.5	430.4	550.9	774.6
150	15.8	50.3	100.3	121.3	150.6	250.8	309.4	418.2	535.3	752.8	19.6	51.0	102.0	123.3	153.0	255.0	314.5	425.0	544.0	765.0
200	13.8	48.6	97.2	117.5	145.8	243.4	300.1	405.4	518.9	729.8	19.2	50.1	100.3	121.2	150.4	250.7	309.2	417.9	534.9	752.1
250	12.1	46.3	92.7	112.0	139.0	231.8	285.8	386.2	494.2	694.8	19.1	49.9	99.9	120.7	149.8	249.6	307.9	416.1	532.6	748.9
300	10.2	45.0	90.0	108.8	135.0	225.1	277.6	375.0	479.9	674.7	19.1	49.8	99.6	120.4	149.5	249.1	307.2	415.2	531.4	747.3
325	9.3	43.3	86.3	104.3	129.6	215.9	266.3	359.8	460.5	647.5	19.0	49.6	99.2	119.9	148.8	248.0	305.9	413.4	529.1	744.1
350	8.4	41.9	83.6	101.1	125.5	209.1	258.0	348.7	446.2	627.4	18.9	49.3	98.6	119.1	147.9	246.4	303.9	410.7	525.7	739.3
375	7.4	40.5	80.7	97.6	121.2	201.9	248.9	336.1	430.3	605.1	18.9	49.3	98.6	119.1	147.9	246.4	303.9	410.7	525.7	739.3
400	6.5	38.0	76.2	92.0	114.2	190.4	234.7	317.1	405.8	570.4	18.9	49.3	98.6	119.1	147.9	246.4	303.9	410.7	525.7	739.3
425	5.5	36.8	73.2	88.5	109.8	183.0	225.6	304.7	390.0	548.3	18.9	49.3	98.6	119.1	147.9	246.4	303.9	410.7	525.7	739.3
450	4.6	35.4	71.1	85.9	106.5	177.5	218.9	295.9	378.7	532.4	18.1	49.3	98.6	119.1	147.9	246.4	303.9	410.7	525.7	739.3
475	3.7	34.4	68.8	83.1	103.2	171.6	211.7	286.3	366.4	515.2	16.4	46.4	92.8	112.1	139.1	231.9	286.0	386.6	494.8	695.8
500	2.8	30.7	61.3	74.1	92.0	153.3	189.0	255.4	326.9	459.8	13.7	38.3	76.6	92.6	114.9	191.6	236.3	319.3	408.7	574.7
538	1.4	18.6	37.1	44.9	55.7	92.8	114.4	154.6	197.9	278.3	8.9	23.2	46.4	56.1	69.6	116.0	143.1	193.3	247.4	347.9
550	1.4	15.4	30.8	37.2	46.2	77.0	95.0	128.3	164.2	230.9	7.4	19.2	38.5	46.5	57.7	96.2	118.7	160.4	205.3	288.6
575	1.4	10.3	20.6	24.9	31.0	51.6	63.6	86.0	110.1	154.8	4.9	12.9	25.8	31.2	38.7	64.5	79.6	107.5	137.6	193.5
593	1.4	7.8	15.5	18.7	23.3	38.8	47.8	64.6	82.7	116.3	3.7	9.7	19.4	23.4	29.1	48.4	59.8	80.8	103.4	145.3
600	1.4	6.8	13.5	16.3	20.3	33.8	41.7	56.3	72.1	101.3	3.2	8.4	16.9	20.4	25.3	42.2	52.1	70.4	90.1	126.6
625	1.4	4.4	8.8	10.7	13.3	22.1	27.3	36.9	47.2	66.3	2.1	5.5	11.1	13.4	16.6	27.6	34.1	46.1	59.0	82.9
649	1.1	2.8	5.7	6.9	8.5	14.1	17.4	23.6	30.2	42.4	1.4	3.5	7.1	8.6	10.6	17.7	21.8	29.5	37.8	53.1

Notes: [1)] Permissible, but not recommended for prolonged use above 593 °C.

A 182 F91 Type 1

	Standard Class										Special Class									
	Working pressures by Class, bar										Working pressures by Class, bar									
Temp. ° C	**150**	**300**	**600**	**725**	**900**	**1500**	**1850**	**2500**	**3200**	**4500**	**150**	**300**	**600**	**725**	**900**	**1500**	**1850**	**2500**	**3200**	**4500**
38	20.0	51.7	103.4	124.9	155.1	258.6	318.9	430.9	551.6	775.7	20.0	51.7	103.4	124.9	155.1	258.6	318.9	430.9	551.6	775.7
50	19.5	51.7	103.4	124.9	155.1	258.6	318.9	430.9	551.6	775.7	20.0	51.7	103.4	124.9	155.1	258.6	318.9	430.9	551.6	775.7
100	17.7	51.5	103.0	124.5	154.6	257.6	317.7	429.4	549.7	773.0	20.0	51.7	103.4	124.9	155.1	258.6	318.9	430.9	551.6	775.7
150	15.8	50.3	100.3	121.3	150.6	250.8	309.4	418.2	535.3	752.8	20.0	51.7	103.4	124.9	155.1	258.6	318.9	430.9	551.6	775.7
200	13.8	48.6	97.2	117.5	145.8	243.4	300.1	405.4	518.9	729.8	20.0	51.7	103.4	124.9	155.1	258.6	318.9	430.9	551.6	775.7
250	12.1	46.3	92.7	112.0	139.0	231.8	285.8	386.2	494.2	694.8	20.0	51.7	103.4	124.9	155.1	258.6	318.9	430.9	551.6	775.7
300	10.2	45.0	90.0	108.8	135.0	225.1	277.6	375.0	479.9	674.7	20.0	51.7	103.4	124.9	155.1	258.6	318.9	430.9	551.6	775.7
325	9.3	43.3	86.3	104.3	129.6	215.9	266.3	359.8	460.5	647.5	20.0	51.7	103.4	124.9	155.1	258.6	318.9	430.9	551.6	775.7
350	8.4	41.9	83.6	101.1	125.5	209.1	258.0	348.7	446.2	627.4	19.8	51.5	102.8	124.3	154.3	257.1	317.1	428.6	548.6	771.4
375	7.4	40.5	80.7	97.6	121.2	201.9	248.9	336.1	430.3	605.1	19.3	51.4	102.5	123.9	153.8	256.3	316.1	427.2	546.8	768.8
400	6.5	38.0	76.2	92.0	114.2	190.4	234.7	317.1	405.8	570.4	19.3	51.3	102.5	123.8	153.6	256.2	315.9	426.7	546.3	768.3
425	5.5	36.8	73.2	88.5	109.8	183.0	225.6	304.7	390.0	548.3	19.0	51.1	102.3	123.6	153.4	255.6	315.3	426.1	545.4	766.9
450	4,6	35,4	71,1	85,9	106,5	177,5	218,9	295,9	378,7	532,4	18.1	49.7	99.1	119.7	148.5	247.6	305.4	412.8	528.4	743.0
475	3.7	34.4	68.8	83.1	103.2	171.6	211.7	286.3	366.4	515.2	16.4	46.4	92.8	112.1	139.1	231.9	286.0	386.6	494.8	695.8
500	2.8	32.1	64.4	77.8	96.6	160.6	198.2	267.9	342.9	482.2	13.7	40.6	81.5	98.4	122.1	203.6	251.1	339.2	434.1	610.4
538	1.4	29.0	57.5	69.6	86.5	144.3	177.9	240.2	307.4	432.2	11.0	33.4	66.6	80.5	99.9	166.9	205.8	278.0	355.8	500.4
550	1.4	28.8	57.3	69.3	86.0	143.6	177.1	239.2	306.1	430.3	11.0	33.4	66.6	80.5	99.9	166.9	205.8	278.0	355.8	500.4
575	1.4	25.9	51.8	62.6	77.7	129.4	159.6	215.7	276.1	388.3	10.9	32.4	64.7	78.2	97.1	161.8	199.5	269.6	345.1	485.4
600	1.4	18.6	37.2	45.0	55.9	93.1	114.8	155.1	198.6	279.3	8.9	23.3	46.5	56.2	69.8	116.4	143.5	193.9	248.2	349.1
625	1.4	12.6	25.2	30.5	37.9	63.1	77.8	105.1	134.6	189.3	6.0	15.8	31.5	38.1	47.3	78.9	97.3	131.4	168.2	236.6
649	1.4	8.4	16.8	20.3	25.2	42.0	51.8	70.0	89.6	126.1	4.0	10.5	21.0	25.4	31.5	52.5	64.8	87.5	112.0	157.6

A 182 F92

	Standard Class								Special Class							
	Working pressures by Class, bar								Working pressures by Class, bar							
Temp. ° C	**150**	**300**	**600**	**900**	**1500**	**2500**	**3200**	**4500**	**150**	**300**	**600**	**900**	**1500**	**2500**	**3200**	**4500**
38	20.0	51.7	103.4	155.1	258.6	430.9	551.6	775.7	20.0	51.7	103.4	155.1	258.6	430.9	551.6	775.7
50	19.5	51.7	103.4	155.1	258.6	430.9	551.6	775.7	20.0	51.7	103.4	155.1	258.6	430.9	551.6	775.7
100	17.7	51.5	103.0	154.6	257.6	429.4	549.7	773.0	20.0	51.7	103.4	155.1	258.6	430.9	551.6	775.7
150	15.8	50.3	100.3	150.6	250.8	418.2	535.3	752.8	20.0	51.7	103.4	155.1	258.6	430.9	551.6	775.7
200	13.8	48.6	97.2	145.8	243.4	405.4	518.9	729.8	20.0	51.7	103.4	155.1	258.6	430.9	551.6	775.7
250	12.1	46.3	92.7	139.0	231.8	386.2	494.2	694.8	20.0	51.7	103.4	155.1	258.6	430.9	551.6	775.7
300	10.2	45.0	90.0	135.0	225.1	375.0	479.9	674.7	20.0	51.7	103.4	155.1	258.6	430.9	551.6	775.7
325	9.3	43.3	86.3	129.6	215.9	359.8	460.5	647.5	20.0	51.7	103.4	155.1	258.6	430.9	551.6	775.7
350	8.4	41.9	83.6	125.5	209.1	348.7	446.2	627.4	19.8	51.5	102.8	154.3	257.1	428.6	548.6	771.4
375	7.4	40.5	80.7	121.2	201.9	336.1	430.3	605.1	19.3	51.4	102.5	153.8	256.3	427.2	546.8	768.8
400	6.5	38.0	76.2	114.2	190.4	317.1	405.8	570.4	19.3	51.3	102.5	153.6	256.2	426.7	546.3	768.3
425	5.5	36.8	73.2	109.8	183.0	304.7	390.0	548.3	19.0	51.1	102.3	153.4	255.6	426.1	545.4	766.9
450	4,6	35,4	71,1	106,5	177,5	295,9	378,7	532,4	18.1	49.7	99.1	148.5	247.6	412.8	528.4	743.0
475	3.7	34.4	68.8	103.2	171.6	286.3	366.4	515.2	16.4	46.4	92.8	139.1	231.9	386.6	494.8	695.8
500	2.8	32.1	64.4	96.6	160.6	267.9	342.9	482.2	13.7	40.6	81.5	122.1	203.6	339.2	434.1	610.4
538	1.4	29.0	57.5	86.5	144.3	240.2	307.4	432.2	11.0	33.4	66.6	99.9	166.9	278.0	355.8	500.4
550	1.4	28.8	57.3	86.0	143.6	239.2	306.1	430.3	11.0	33.4	66.6	99.9	166.9	278.0	355.8	500.4
575	1.4	27.8	55.6	83.3	129.4	231.4	296.2	416.6	10.9	33.2	66.2	99.4	165.9	276.4	345.1	497.4
600	1.4	25.3	50.2	75.1	93.1	208.8	267.3	376.0	10.3	31.5	62.6	94.1	156.8	261.4	248.2	470.3
625	1.4	19.4	38.7	58.1	63.1	161.4	206.6	290.6	8.7	24.2	48.4	72.6	121.1	201.8	168.2	363.2
649	1.4	13.4	26.8	40.1	42.0	111.5	142.7	200.7	6.4	16.7	33.5	50.2	83.6	139.4	112.0	250.9

Subject to technical modifications

A 182 F316L [1)]

	Standard Class										Special Class									
	Working pressures by Class, bar										Working pressures by Class, bar									
Temp. ° C	**150**	**300**	**600**	**725**	**900**	**1500**	**1850**	**2500**	**3200**	**4500**	**150**	**300**	**600**	**725**	**900**	**1500**	**1850**	**2500**	**3200**	**4500**
38	15.8	41.1	82.3	99.4	123.4	205.7	253.7	342.9	438.9	617.1	17.7	46.3	92.6	111.9	138.9	231.4	285.4	385.7	493.7	694.3
50	15.5	40.5	80.9	97.8	121.4	202.3	249.5	337.1	431.5	606.9	17.3	45.0	90.0	108.8	135.0	225.0	277.5	375.0	480.0	675.0
100	13.4	35.0	69.9	84.9	105.9	174.9	215.7	291.4	373.0	524.6	14.9	38.8	77.7	93.9	116.5	194.1	239.4	323.6	414.2	582.4
150	12.1	31.4	62.9	76.0	94.3	157.2	193.9	262.0	335.4	471.6	13.5	35.1	70.2	84.8	105.3	175.5	216.5	292.5	374.4	526.5
200	11.1	29.0	58.1	70.2	87.1	145.2	179.1	242.0	309.8	435.6	12.4	32.4	64.8	78.3	97.2	162.0	199.8	270.0	345.6	486.0
250	10.5	27.4	54.7	66.1	82.1	136.8	168.7	228.0	291.8	410.4	11.7	30.6	61.1	73.9	91.7	152.8	188.4	254.6	325.9	458.4
300	9.9	25.9	51.8	62.6	77.8	129.6	159.8	216.0	276.5	388.8	11.1	28.9	57.9	69.9	86.8	144.6	178.4	241.1	308.6	433.9
325	9.3	25.4	50.9	61.5	76.3	127.2	156.9	212.0	271.4	381.6	10.9	28.4	56.8	68.6	85.2	142.1	175.2	236.8	303.1	426.2
350	8.4	25.0	49.9	60.3	74.9	124.8	153.9	208.0	266.2	374.4	10.7	27.9	55.7	67.3	83.6	139.3	171.8	232.1	297.1	417.9
375	7.4	24.7	49.4	59.7	74.2	123.6	152.4	206.0	263.7	370.8	10.6	27.6	55.2	66.7	82.8	138.0	170.2	230.0	294.4	414.0
400	6.5	24.2	48.5	58.6	72.7	121.2	149.5	202.0	258.6	363.6	10.4	27.0	54.1	65.4	81.1	135.2	166.8	225.4	288.5	405.6
425	5.5	23.9	47.7	57.7	71.6	119.3	147.2	198.9	254.6	357.9	10.2	26.6	53.2	64.3	79.8	133.1	164.1	221.8	283.9	399.2
454	4.6	23.4	46.8	56.6	70.3	117.1	144.4	195.1	249.8	351.3	10.0	26.1	52.2	63.1	78.3	130.5	161.0	217.5	278.4	391.5

Notes: [(1)] Not to be used over 454 °C.

A 182 F347H [2)]

	Standard Class										Special Class									
	Working pressures by Class, bar										Working pressures by Class, bar									
Temp. ° C	**150**	**300**	**600**	**725**	**900**	**1500**	**1850**	**2500**	**3200**	**4500**	**150**	**300**	**600**	**725**	**900**	**1500**	**1850**	**2500**	**3200**	**4500**
38	19.1	49.7	99.4	120.1	149.1	248.6	306.6	414.3	530.3	745.7	20.0	51.7	103.4	124.9	155.1	258.6	318.9	430.9	551.6	775.7
50	18.8	49.0	98.1	118.5	147.1	245.1	302.3	408.6	523.0	735.4	20.0	51.7	103.4	124.9	155.1	258.6	318.9	430.9	551.6	775.7
100	17.3	45.3	90.5	109.4	135.8	226.3	279.1	377.1	482.7	678.9	19.4	50.6	101.1	122.2	151.7	252.9	311.9	421.4	539.4	758.6
150	15.8	42.5	85.0	102.7	127.5	212.6	262.2	354.3	453.5	637.7	18.2	47.6	95.1	114.9	142.7	237.9	293.4	396.4	507.4	713.6
200	13.8	39.8	79.5	96.1	119.3	198.9	245.3	331.4	424.2	596.6	17.1	44.6	89.1	107.7	133.7	222.9	274.9	371.4	475.4	668.6
250	12.1	37.7	75.4	91.1	113.1	188.6	232.6	314.3	402.3	565.7	16.1	42.0	84.1	101.6	126.1	210.2	259.3	350.4	448.5	630.6
300	10.2	36.0	72.0	87.0	108.0	180.0	222.0	300.0	384.0	540.0	15.4	40.2	80.4	97.2	120.6	201.0	247.9	335.0	428.8	603.0
325	9.3	35.3	70.6	85.3	105.9	176.6	217.8	294.3	376.7	529.7	15.1	39.4	78.8	95.2	118.2	196.9	242.9	328.2	420.1	590.8
350	8.4	35.0	69.9	84.5	104.9	174.9	215.7	291.4	373.0	524.6	14.9	38.8	77.7	93.9	116.5	194.1	239.4	323.6	414.2	582.4
375	7.4	34.1	68.2	82.4	102.2	170.4	210.2	284.0	363.5	511.2	14.6	38.1	76.1	92.0	114.2	190.3	234.7	317.1	405.9	570.9
400	6.5	33.8	67.7	81.8	101.5	169.2	208.7	282.0	361.0	507.6	14.5	37.8	75.5	91.3	113.3	188.8	232.8	314.6	402.7	566.4
425	5.5	33.6	67.2	81.2	100.8	168.0	207.2	280.0	358.4	504.0	14.4	37.5	75.0	90.6	112.5	187.5	231.3	312.5	400.0	562.5
450	4.6	33.4	66.7	80.6	100.1	166.8	205.7	278.0	355.8	500.4	14.3	37.2	74.5	90.0	111.7	186.2	229.7	310.4	397.3	558.6
475	3.7	33.4	66.7	80.6	100.1	166.8	205.7	278.0	355.8	500.4	14.3	37.2	74.5	90.0	111.7	186.2	229.7	310.4	397.3	558.6
500	2.8	32.1	64.4	77.8	96.6	160.6	198.2	267.9	342.9	482.2	13.7	37.2	74.5	90.0	111.7	186.2	229.7	310.4	397.3	558.6
538	1.4	29.0	57.5	69.6	86.5	144.3	177.9	240.2	307.4	432.2	11.0	33.4	66.6	80.5	99.9	166.9	205.8	278.0	355.8	500.4
550	1.4 (5)	28.8	57.3	69.3	86.0	143.6	177.1	239.2	306.1	430.3	11.0	33.4	66.6	80.5	99.9	166.9	205.8	278.0	355.8	500.4
575	1.4 (5)	27.8	55.6	67.1	83.3	138.9	171.3	231.4	296.2	416.6	10.9	33.2	66.2	80.0	99.4	165.9	204.6	276.4	353.8	497.4
600	1.4 (5)	25.3	50.2	60.6	75.1	125.2	154.5	208.8	267.3	376.0	10.3	31.5	62.6	75.7	94.1	156.8	193.4	261.4	334.5	470.2
625	1.4 (5)	21.5	43.0	52.0	64.5	107.2	132.2	178.6	228.7	321.7	8.7	27.0	53.7	64.9	80.6	134.3	165.7	224.0	286.6	402.8
650	1.4 (5)	16.6	33.2	40.3	50.2	83.4	102.8	138.9	177.7	249.8	6.9	21.1	41.9	50.6	62.7	104.5	129.0	174.5	223.3	314.0
675	1.4 (5)	14.2	28.4	34.3	42.6	71.0	87.6	118.3	151.4	212.9	6.2	17.7	35.5	42.9	53.2	88.7	109.4	147.9	189.3	266.1
700	1.4 (5)	10.9	21.8	26.3	32.7	54.5	67.2	90.9	116.3	163.5	4.8	13.6	27.3	33.0	40.9	68.1	84.0	113.6	145.4	204.4
725	1.4 (5)	8.2	16.4	19.8	24.6	41.0	50.6	68.3	87.4	122.9	3.7	10.2	20.5	24.8	30.7	51.2	63.2	85.4	109.3	153.6
750	1.4 (5)	6.4	12.9	15.6	19.3	32.2	39.7	53.7	68.8	96.7	2.8	8.1	16.1	19.5	24.2	40.3	49.7	67.1	85.9	120.9
775	1.4 (5)	5.0	10.0	12.1	15.0	25.0	30.8	41.7	53.4	75.1	2.2	6.3	12.5	15.1	18.8	31.3	38.6	52.1	66.7	93.9
800	1.2 (5)	3.7	7.4	8.9	11.1	18.5	22.8	30.9	39.5	55.5	1.8	4.6	9.3	11.2	13.9	23.1	28.5	38.6	49.4	69.4
816	1.0 (5)	3.1	6.1	7.4	9.2	15.3	18.8	25.4	32.5	45.8	1.4	3.8	7.6	9.2	11.4	19.1	23.5	31.8	40.7	57.2

Notes: [(2)] Not to be used over 650 °C.

Features are per ASME B16.25

NPS	Schedule No.	Outside Diameter Wrought (A) inches	mm	Outside Diameter Cast (A) inches	mm	B inches	mm	C (Note (3)) inches	mm	t wall thickness inches	mm
1/2	80, 80S	0.840	21.3	0.90	23	0.546	13.84	0.558	14.12	0.147	3.73
	160	0.840	21.3	0.90	23	0.464	11.74	0.486	12.28	0.188	4.78
	XXS	0.840	21.3	0.90	23	0.252	6.36	0.300	7.58	0.294	7.47
3/4	80, 80S	1.050	26.7	1.11	28	0.742	18.88	0.756	19.21	0.154	3.91
	160	1.050	26.7	1.11	28	0.612	15.58	0.642	16.32	0.219	5.56
	XXS	1.050	26.7	1.11	28	0.434	11.06	0.486	12.36	0.308	7.82
1	40, 40S	1.315	33.4	1.37	35	1.049	26.64	1.057	26.84	0.133	3.380
	80, 80S	1.315	33.4	1.37	35	0.957	24.30	0.977	24.79	0.179	4.550
	160	1.315	33.4	1.37	35	0.815	20.70	0.852	21.64	0.250	6.350
	XXS	1.315	33.4	1.37	35	0.599	15.22	0.664	16.84	0.358	9.090
1 1/4	40, 40S	1.660	42.2	1.74	44	1.380	35.08	1.390	35.32	0.140	3.560
	80, 80S	1.660	42.2	1.74	44	1.278	32.50	1.301	33.06	0.191	4.850
	160	1.660	42.2	1.74	44	1.160	29.50	1.198	30.44	0.250	6.350
	XXS	1.660	42.2	1.74	44	0.896	22.80	0.966	24.58	0.382	9.700
1 1/2	40, 40S	1.900	48.3	1.98	50	1.610	40.94	1.621	41.21	0.145	3.680
	80, 80S	1.900	48.3	1.98	50	1.500	38.14	1.525	38.76	0.200	5.080
	160	1.900	48.3	1.98	50	1.338	34.02	1.383	35.16	0.281	7.140
	XXS	1.900	48.3	1.98	50	1.100	28.00	1.175	29.89	0.400	10.150
2	40, 40S	2.375	60.3	2.46	62	2.067	52.48	2.064	53.35	0.154	3.910
	80, 80S	2.375	60.3	2.46	62	1.939	49.22	1.952	50.50	0.218	5.540
	160	2.375	60.3	2.46	62	1.687	42.82	1.732	44.90	0.344	8.740
	XXS	2.375	60.3	2.46	62	1.503	38.16	1.571	40.82	0.436	11.070
3	30	3.500	88.9	3.59	91	3.124	79.50	3.130	79.50	0.188	4.780
	40, 40S	3.500	88.9	3.59	91	3.068	78.00	3.081	78.25	0.216	5.490
	80, 80S	3.500	88.9	3.59	91	2.900	73.50	2.934	74.53	0.300	7.620
	160	3.500	88.9	3.59	91	2.624	66.50	2.692	68.38	0.438	11.130
	XXS	3.500	88.9	3.59	91	2.300	58.50	2.409	61.19	0.600	15.240
4	30	4.500	114.3	4.62	117	4.124	104.50	4.130	104.90	0.188	4.78
	40	4.500	114.3	4.62	117	4.026	102.00	4.044	102.73	0.237	6.020
	80	4.500	114.3	4.62	117	3.826	97.00	3.869	98.28	0.337	8.560
	120	4.500	114.3	4.62	117	3.624	92.00	3.692	93.78	0.438	11.13
	160	4.500	114.3	4.62	117	3.438	87.50	3.530	89.65	0.531	13.490
	XXS	4.500	114.3	4.62	117	3.152	80.00	3.279	83.30	0.674	17.120
6	40, 40S	6.625	168.3	6.78	172	6.065	154.00	6.094	154.82	0.280	7.110
	80, 80S	6.625	168.3	6.78	172	5.761	146.50	5.828	148.06	0.432	10.970
	120	6.625	168.3	6.78	172	5.501	140.00	5.600	142.29	0.562	14.27
	160	6.625	168.3	6.78	172	5.187	132.00	5.326	135.31	0.719	18.260
	XXS	6.625	168.3	6.78	172	4.897	124.50	5.072	128.85	0.864	21.950
8	20	8.625	219.1	8.78	223	8.125	206.50	8.146	206.95	0.250	6.35
	30	8.625	219.1	8.78	223	8.071	205.00	8.099	205.74	0.277	7.04
	40, 40S	8.625	219.1	8.78	223	7.981	203.00	8.020	203.75	0.322	8.180
	60	8.625	219.1	8.78	223	7.813	198.50	7.873	200.02	0.406	10.31
	80, 80S	8.625	219.1	8.78	223	7.625	193.50	7.709	195.84	0.500	12.700
	100	8.625	219.1	8.78	223	7.437	189.00	7.544	191.65	0.59	15.09
	120	8.625	219.1	8.78	223	7.187	182.50	7.326	186.11	0.72	18.26
	140	8.625	219.1	8.78	223	7.001	178.00	7.163	181.98	0.812	20.620
	160	8.625	219.1	8.78	223	6.813	173.00	6.998	177.79	0.906	23.010
10	20	10.750	273.0	10.94	278	10.250	260.50	10.272	260.85	0.250	6.35
	30	10.750	273.0	10.94	278	10.136	257.50	10.172	258.31	0.307	7.80
	40, 40S	10.750	273.0	10.94	278	10.020	254.50	10.070	255.74	0.365	9.27
	60, 80S	10.750	273.0	10.94	278	9.750	247.50	9.834	249.74	0.500	12.70
	80	10.750	273.0	10.94	278	9.562	243.00	9.670	245.55	0.594	15.09
	100	10.750	273.0	9.312	278	9.312	236.50	9.451	240.01	0.72	18.26
	120	10.750	273.0	9.062	278	9.062	230.00	9.232	234.44	0.84	21.44
	140	10.750	273.0	8.750	278	8.750	222.00	8.959	227.51	1.000	25.40
	160	10.750	273.0	8.500	278	8.500	216.00	8.740	221.95	1.125	28.58
12	23	12.750	323.8	12.97	329	12.250	311.00	12.272	311.65	0.250	6.35
	30	12.750	323.8	12.97	329	12.090	307.00	12.132	308.10	0.330	8.38
	STD, 40S	12.750	323.8	12.97	329	12.000	305.00	12.055	306.08	0.375	9.53
	40	12.750	323.8	12.97	329	11.938	303.00	11.999	304.72	0.406	10.31
	XS, 80S	12.750	323.8	12.97	329	11.750	298.50	11.834	300.54	0.500	12.70
	60	12.750	323.8	12.97	329	11.626	295.00	11.725	297.79	0.562	14.27
	80	12.750	323.8	12.97	329	11.374	289.00	11.505	292.17	0.688	17.48
	100	12.750	323.8	12.97	329	11.062	281.00	11.232	285.24	0.844	21.44
	120	12.750	323.8	12.97	329	10.750	273.00	10.959	278.31	1.000	25.40
	140	12.750	323.8	12.97	329	10.500	266.50	10.740	272.75	1.125	28.58
	160	12.750	323.8	12.97	329	10.126	257.00	10.413	264.45	1.312	33.32
14	20	14.000	355.6	14.25	362	13.376	340.00	13.413	340.70	0.312	7.92
	STD, 40S	14.000	355.6	14.25	362	13.250	336.50	13.303	337.88	0.375	9.53
	40	14.000	355.6	14.25	362	13.124	333.50	13.192	335.08	0.438	11.13
	XS, 80S	14.000	355.6	14.25	362	13.000	330.00	13.084	332.34	0.500	12.70
	60	14.000	355.6	14.25	362	12.812	325.50	12.920	328.15	0.594	15.09
	80	14.000	355.6	14.25	362	12.500	317.50	12.646	321.22	0.750	19.05
	100	14.000	355.6	14.25	362	12.124	308.00	12.318	312.86	0.938	23.83
	120	14.000	355.6	14.25	362	12.812	300.00	12.044	305.93	1.094	27.79
	140	14.000	355.6	14.25	362	11.500	292.00	11.771	299.00	1.250	31.75
	160	14.000	355.6	14.25	362	11.188	284.00	11.498	292.07	1.406	35.71

Black numerals are in inch. Blue numerals are in millimeter.

Subject to technical modifications

Features are per ASME B16.25

NPS	Schedule No.	Outside Diameter Wrought (A) inches	mm	Outside Diameter Cast (A) inches	mm	B inches	mm	C (Note (3)) inches	mm	t wall thickness inches	mm
16	20	16.000	406.4	16.25	413	15.376	391.50	15.413	391.50	0.312	7.92
	STD, 40S	16.000	406.4	16.25	413	15.250	387.50	15.303	388.68	0.375	9.53
	40, 80S	16.000	406.4	16.25	413	15.000	381.00	15.084	383.14	0.500	12.70
	60	16.000	406.4	16.25	413	14.688	373.00	14.811	376.21	0.656	16.66
	80	16.000	406.4	16.25	413	14.312	363.50	14.482	367.84	0.844	21.44
	100	16.000	406.4	16.25	413	13.938	354.00	14.155	359.53	1.031	26.19
	120	16.000	406.4	16.25	413	13.562	344.50	13.826	351.18	1.219	30.96
	140	16.000	406.4	16.25	413	13.124	333.50	13.442	341.43	1.438	36.53
	160	16.000	406.4	16.25	413	12.812	325.50	13.170	334.50	1.594	40.49
18	20	18.000	457.2	18.28	464	17.376	441.50	17.413	442.30	0.312	7.92
	30	18.000	457.2	18.28	464	17.124	435.00	17.192	436.68	0.438	11.13
	STD, 40S	18.000	457.2	18.28	464	17.250	438.00	17.303	439.48	0.375	9.53
	XS, 80S	18.000	457.2	18.28	464	17.000	432.00	17.084	433.94	0.500	12.70
	40	18.000	457.2	18.28	464	16.876	428.50	16.975	431.19	0.562	14.27
	60	18.000	457.2	18.28	464	16.500	419.00	16.646	422.82	0.750	19.05
	80	18.000	457.2	18.28	464	16.124	409.50	16.318	414.46	0.938	23.83
	100	18.000	457.2	18.28	464	15.688	398.50	15.936	404.78	1.156	29.36
	120	18.000	457.2	18.28	464	15.250	387.50	15.553	395.03	1.375	34.93
	140	18.000	457.2	18.28	464	14.876	378.00	15.225	386.77	1.562	39.67
	160	18.000	457.2	18.28	464	14.438	366.50	14.842	376.99	1.781	45.24
20	STD, 40S	20.000	508.0	20.31	516	19.250	489.00	19.303	490.28	0.375	9.53
	XS, 80S	20.000	508.0	20.31	516	19.000	482.50	19.084	484.74	0.500	12.70
	40	20.000	508.0	20.31	516	18.812	478.00	18.920	480.55	0.594	15.09
	60	20.000	508.0	20.31	516	18.376	467.00	18.538	470.88	0.812	20.62
	80	20.000	508.0	20.31	516	17.938	455.50	18.155	461.13	1.031	26.19
	100	20.000	508.0	20.31	516	17.438	443.00	17.717	450.02	1.281	32.54
	120	20.000	508.0	20.31	516	17.000	432.00	17.334	440.29	1.500	38.10
	140	20.000	508.0	20.31	516	16.500	419.00	16.896	429.17	1.750	44.45
	160	20.000	508.0	20.31	516	16.062	408.00	16.513	419.44	1.969	50.01
22	STD	22.000	558.8	22.34	567	21.250	539.00	21.303	541.08	0.375	9.53
	XS	22.000	558.8	22.34	567	21.000	533.00	21.084	535.54	0.500	12.70
	60	22.000	558.8	22.34	567	20.250	514.00	20.428	518.86	0.875	22.23
	80	22.000	558.8	22.34	567	19.750	501.00	19.990	507.75	1.125	28.58
	100	22.000	558.8	22.34	567	19.250	488.50	19.553	496.63	1.375	34.93
	120	22.000	558.8	22.34	567	18.750	476.00	19.115	485.52	1.625	41.28
	140	22.000	558.8	22.34	567	18.250	463.00	18.678	474.41	1.875	47.63
	160	22.000	558.8	22.34	567	17.750	450.50	18.240	463.30	2.125	53.98
24	STD, 40S	24.000	609.6	24.38	619	23.250	590.50	23.303	591.88	0.375	9.53
	XS, 80S	24.000	609.6	24.38	619	23.000	584.00	23.084	586.34	0.500	12.70
	30	24.000	609.6	24.38	619	22.876	581.00	22.975	583.59	0.562	14.27
	40	24.000	609.6	24.38	619	22.624	574.50	22.755	577.97	0.688	17.48
	60	24.000	609.6	24.38	619	22.062	560.50	22.263	565.49	0.969	24.61
	80	24.000	609.6	24.38	619	21.562	547.50	21.826	554.38	1.219	30.96
	100	24.000	609.6	24.38	619	20.938	532.00	21.280	540.49	1.531	38.89
	120	24.000	609.6	24.38	619	20.376	517.50	20.788	528.03	1.812	46.02
	140	24.000	609.6	24.38	619	19.876	505.00	20.350	516.91	2.062	52.37
	160	24.000	609.6	24.38	619	19.312	490.50	19.857	504.37	2.344	59.54

End Configurations Socket Welding - Ends ASME B16.11

	NPS	DN	NPS	DN	NPS	DN	NPS	DN	NPS	DN	NPS	DN
Valve Sizes	1/2	15	3/4	20	1	25	1 1/4	32	1 1/2	40	2	50
A - Socket Diameter - min.	0.855	22	1.065	27	1.330	34	1.675	43	1.915	49	2.406	61
B - Depth of Socket - min.	0.38	10	0.50	13	0.50	13	0.50	13	0.50	13	0.62	16

Black numerals are in inch. Blue numerals are in millimeter.

Attention:

The material in this catalog is for general information. For specific performance data and proper material selection, consult your PERSTA representative. Although every attempt has been made to ensure that the information contained in this catalog is correct, PERSTA reserves the right to change designs, materials or specifications without notice.

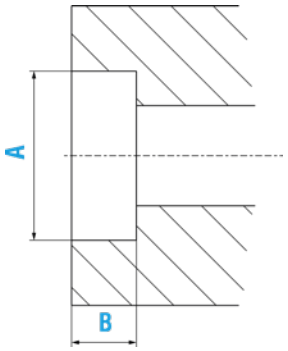

Socket Welding Ends
Conforming to requirements of ASME B16.11

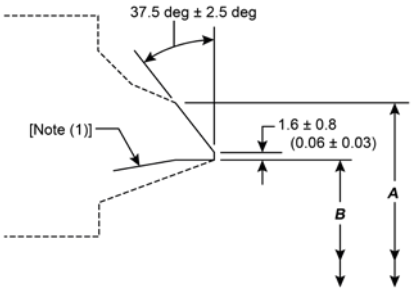

(a) Welding End Detail for Joint Without Backing Ring

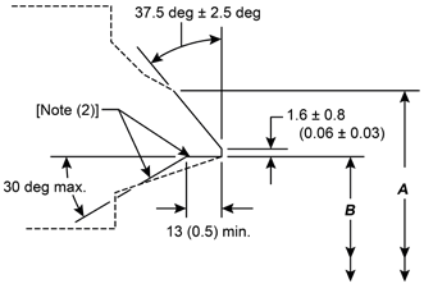

(b) Welding End Detail for Joint Using Split Rectangular Backing Ring

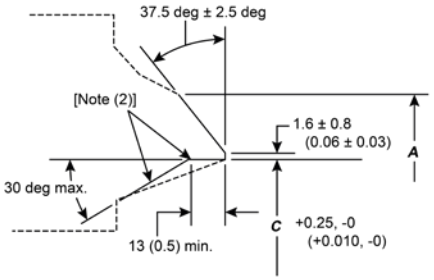

(c) Welding End Detail for Joint Using Continuous Rectangular Backing Ring

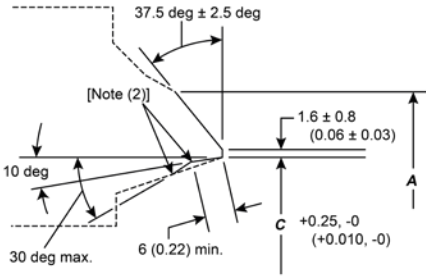

(d) Welding End Detail for Joint Using Continuous Tapered Backing Ring

A - Nominal outside diameter of pipe
B - Nominal inside diameter of pipe
C - Inside diameter for backing ring
t - Wall thickness of pipe

Important

When ordering buttwelding end valves; indicate type of weld prep desired from this page and give pipe schedule to be used or provide other complete instructions, missing or incomplete weld prep information may delay shipment of valves.

Inside and outside of welding ends of both cast and forged steel valves to be finish machined and carefully inspected where the thickness of these ends less than 1.15t. Runout of machined surface diameter of valve to have no abrupt change in section. Inside diameter of valve may be either larger or smaller than pipe inside diameter.

Approvals

Name of testing firm or auditing company	Specification
FRAMATOME/Siemens/AREVA	AVS D 100/50
FRAMATOME/Siemens/AREVA	KTA 1401
TÜV Cert	DIN EN ISO 9001:2000
Forsmark/Vattenfall	DIN EN ISO 9001:2000
TÜV Nord	CE 0045, DGRL97/23/EG
FSPO Moscow	Goststandard Russia
FSPO Moscow	RTN
Promatomnadzor Minsk	GOSPROMNADZOR (Belarus)
Alstom Power	Alstom QS-System
Shell Nederland Raffin.BV	Service group 77DAAB
	Service group 77DPBA
Shell Nederland Chemie BV	Service group 77DAAB
	Service group 77DPBA
Canada	Canadian Registration; CSA B51

Design	ASME B16.34 / ASME B31.3
Pressure Rating	ASME B16.34
Testing	API 598 and MSS-SP61
Marking	MSS-SP 25 and CE-PED
Certificate	EN 10204-3.1

Subject to technical modifications

Valve type

Valve type	PERSTA code
High pressure globe valve HD 91.1	200 JM
High pressure globe valve HD 2000	200 LM
High pressure globe valve DVA 25 / DVA 40	200 BZ
Blow down valve KAV	202 FJ
Gate valve S 2000	700 HJ/JJ
Gate valve PD 18	700 JJ
High pressure gate valve DSK 10	700 JT
High pressure gate valve DSK 26	700 JT
High pressure gate valve DSK 27	700 JT
Swing check valve	640 AA
Swing check valve	640 AA
High pressure swing check valve DRI 26	640 AB
High pressure swing check valve DRI 27	640 AB
High pressure stop check valve DRA 26/27	640 ST
High pressure line blind valve DPV 10-27	990 VW

Materials

ASTM-No.	PERSTA Code
A 105	B1
A 516 GR 60	B2
A 350 LF2	B5
A 182 F12	D4
A 182 F22	D5
A 182 F91	F3
A 182 F92	F6
A 182 F347H	H9

Connection

Connection	PERSTA code
Flanges (RF) acc. to ASME B16.5, Face to Face dimensions acc. to ASME B16.10 (except HD 91, HD 2000)	1
Butt welded ends (BW) acc. to ASME B16.25, Face to Face dimensions to ASME B16.1 (except HD 91, HD 2000)	2
Socket welded ends (SW) acc. to ASME B16.11, Face to Face dimensions to PERSTA standard	8
Special ends	9

Figure number code

Example: XXX XX XX. X

- Valve type
- Material
- Connection

Series code result

700 JT B1 2

SAVE TIME AND MONEY WITH

PERSTA S-Sembly™



Save work and time on the construction site by having your product prepared and delivered to you ready to be installed.

We deliver in compliance with EN-Standard or ASME-S-Stamp!

ASME-S TESTED

Contact us by email.

We're looking forward to be of service to you!

Subject to technical modifications

Stahl-Armaturen PERSTA GmbH
Mülheimer Straße 18
59581 Warstein, Germany
Telefon +49 29 02 7 62-02
info@persta.com
www.persta.com

stahlarmaturenpersta
persta_stahlarmaturen
@stahl-armaturenperstagmbh6732
stahl-armaturen-persta-gmbh

Contact us by email.
We're looking forward to be of service to you!

We reserve the copyright to this document. Duplication, utilisation or disclosure to third parties is prohibited, punishable under law and will be prosecuted (German Copyright Act, Law Against Unfair Competition (UWG), German Civil Code (BGB)). We reserve all rights in respect of the issuing of patents or registration of commercial samples, and we reserve the right to make technical modifications.

6035.1.11.26